STRVCTVRAL DRAWING

C. F. EDMINSTER

Class T355
Book .E74
Copyright No. 1913

COPYRIGHT DEPOSIT.

STRUCTURAL DRAWING

BY

C. FRANKLIN EDMINSTER

INSTRUCTOR IN DEPARTMENT OF FINE AND APPLIED ARTS,
PRATT INSTITUTE, BROOKLYN, NEW YORK.

SECOND EDITION.

PUBLISHED BY THE AUTHOR.

T 355
E24
1913

Copyright, 1907, by C. FRANKLIN EDMINSTER.
Copyright, 1913, by C. FRANKLIN EDMINSTER.

$2.00
©CLA357308

PREFACE.

In preparing this work, the author has aimed to present to the mechanic and others who are interested, a systematic course of instruction in structural drawing, beginning with the standard forms and leading to the typical columns, girders, trusses, and framing details.

The drawings are made as simple as possible, and many isometric views are given to further assist in reading and understanding the subject.

A few problems in geometry and projection have been introduced for the benefit of those who have not studied drawing: also a short chapter covering the general notes on drawing materials.

The student should begin with the first plate and follow in the order given, mastering each problem in succession.

C. Franklin Edminster

CONTENTS.

CHAPTER		PAGE
I.	Notes on Materials	7
II.	Geometrical Problems	13
III.	Simple Projection, Introducing the Principles of Working Drawings	24
IV.	Structural Details	38
V.	Steel Mill Construction	108
VI.	Iron Staircase Construction	132
VII.	Ornamental Iron Work	151

ABCDEFGHIJKLMNOPQRSTUVWXYZ

ABCDEFGHIJKLMNOPQRSTUVWXYZ
abcdefghijklmnopqrstuvwxyz

ABCDEFGHIJKLM
NOPQRSTUV
WXYZ

1234567890

STRUCTURAL DRAWING.

CHAPTER I.

NOTES ON MATERIALS.

THE student beginning the study of structural drawing should provide himself with the necessary instruments of a good quality. He should not be hampered by using inferior materials, as many difficulties will arise under even the best conditions.

Drawing Boards.—One of the best methods of making a drawing board is to glue together narrow strips of boards, fastening two cleats (about two inches wide) across the back in such a way that there will be perfect freedom for the wood to expand and contract, which it surely will do as the humidity of the atmosphere changes. This freedom may be obtained by cutting slots in the cleats through which the screws pass and placing iron washers under the heads of the screws. A much cheaper board can be constructed by securing narrow pieces across each end, which serve to hold the board from warping. This form of board will answer very well, especially if the paper used is not stretched. It is extremely important that one end and one side of the board should be perfectly straight.

Drawing Paper.—Drawing paper that is to be used for general draughting and line work in pencil or ink should have a firm, smooth surface that is not easily roughened when era-

sures are made. As a rule, paper that is well adapted to line work will not receive a flat wash readily. Paper suitable for wash drawings is made with a surface less firm but rougher than for line work. Whatman's cold pressed paper possesses unusual properties, in that it works well for both line and wash drawings. For general detail work, some of the tinted papers are more pleasant to work upon than white, as the white is rather trying to the eyes, especially when used in the evening. For highly finished drawings, however, white paper is generally preferred. The right side of the paper can usually be determined by holding it to the light and finding the water-mark, which should read correctly on the side used. Drawing paper may be obtained in sheets of standard sizes as follows: Cap, 13″ x 17″; Demy, 15″ x 20″; Medium, 17″ x 22″; Royal, 19″ x 24″; Super Royal, 19″ x 27″; Imperial, 22″ x 30″; Elephant, 23″ x 28″; Atlas, 26″ x 34″; Double Elephant, 27″ x 40″; Antiquarian, 31″ x 53″; Emperor, 48″ x 68″. The above terms apply only to the sizes of the sheets, and not in any way to grade or quality of the paper.

T-Square.—The T-square is made of two parts, the head and blade, which are fastened together at right angles to each other. This instrument should be used for drawing horizontal lines only, always holding the head against the left-hand edge of the board. Should the draughtsman allow himself to use either left or right side of the board at will, the results obtained would be very inaccurate, owing to the fact that two ends or sides of the board are seldom, if ever, parallel. Again, many times the T-square blade does not form right angles with the head. One may readily see that horizontal lines drawn under such conditions would not be parallel.

Triangles.—The draughtsman should provide himself with two triangles; the 45°, and the 30° and 60°. The triangles are used for drawing all lines that are not horizontal. Vertical

lines should always be drawn by placing the triangle on the upper edge of the T-square blade, holding the pencil or pen in a plane perpendicular to the surface of the paper, inclining it slightly, and drawing upward, but never downward. In drawing horizontal lines, the pencil or pen should be held in a plane perpendicular to the paper, inclining it slightly to the right. Draw from left to right. Angles of 45°, 30°, 60° and 90°, with a horizontal line, can be drawn at once by placing the triangle on the T-square blade.

Instruments.—Instruments should be selected with the greatest care. It is much better to have a few pieces of excellent quality than a great number of inferior make. Choose quality rather than quantity. Instruments should be well cared for, properly wiped each time after using, and the points prevented from contact with hard substances which will tend to injure them.

Compasses.—When drawing with the compasses the head should be held lightly between the thumb and two fingers, moving the leg containing the lead in the direction traversed by the hands of a clock, inclining it slightly in the direction of the line to be drawn. The joints in the legs should be so adjusted as to keep the lower sections perpendicular to the surface of the paper, and when a circle is of such a size as will not admit of this the lengthening bar should be inserted.

Ruling Pen:—The ruling pen is a very important instrument and should be made of the very best hardened steel; if not, it will give the student endless trouble. Most of the prepared inks in general use are provided with a quill in the cork of the bottle which lifts a certain amount of ink. The quill may be inserted between the nibs of the pen and the ink allowed to flow into the pen. The ink should not be more than one-fourth of an inch deep between the nibs. Clean the pen frequently by immersing it first in clear water and then passing a

piece of cloth or chamois skin between the nibs. The pen should never be put away after using without being thoroughly cleansed.

Pencil.—The character of the work performed by a student is generally influenced by the condition in which he keeps his pencil. It is impossible to do accurate work with a dull pencil. For all rule work the wedge-shaped point possesses an advantage over the round point, in that it has a greater wearing surface, hence will not require sharpening so often. For all freehand work nothing but the round or conical point should be used. Some draughtsmen prefer this point for rule work as well. The wood should be cut well back, leaving at least one-fourth of an inch of the lead exposed. One of the best sharpeners for a pencil is a fine flat file, on which the lead should be frequently applied, to produce a sharp point. Where great accuracy is required, the beginner should use a 4 H pencil. As skill in draughting is acquired, a softer grade may be substituted. A medium grade pencil should be used for lining-in the drawings where strength of line is required.

The Scale.—A scale is an instrument used in reducing a drawing that would otherwise be too large for the sheet of paper on which it is to be placed. For instance, if we have a building measuring 40 x 60 ft., the drawing may be made on a scale of ¼ of an inch to 1 ft. The space occupied upon the plate would be 10 x 15 in., exactly in proportion to the actual size. In using this scale, or proportion, we have taken an actual ¼ of an inch and considered it 1 ft.; and this being taken as 1 ft. we divide it into 12 parts, each part being equal to 1 in. There will be found several different scales upon the instrument, all of which are divided in a similar manner.

Irregular Curve.—This instrument is used in drawing curves that cannot be accomplished by the use of the compass. Such curved lines usually pass through a succession of points which

have already been found. The edge of the irregular curve should be so placed (by repeated trials) as to pass through as many points as possible and also a portion of the line already drawn. Never draw through the last point covered by the irregular curve. This operation requires a great deal of care in order to produce a perfectly smooth curve.

Penciling.—Too much stress cannot be placed upon the first penciling of a drawing. All drawings, whether to be inked-in or left in a strong pencil line, should first be worked out with a light line and very accurately placed. Many students have the feeling that they can correct the little errors while lining-in the drawing; this is not so, the chances being that they will greatly increase rather than diminish the faults.

Inking.—For highly finished drawings the stick India ink is generally preferred, but for ordinary work the prepared will be found satisfactory. The great advantage that stick ink possesses over the prepared is, that in case of error the line can readily be removed with the ordinary eraser. The disadvantage in using the stick ink is that considerable time each day is required to grind a fresh supply. In inking a drawing the student should ink all circles and arcs of circles first, then, beginning with the upper horizontal line, ink in order those below. With the vertical lines, begin on the left side of the plate and ink each line in succession. When several lines meet at a point always begin to ink from that point, allowing each successive line to dry before drawing another, thus preventing a blot that would otherwise occur at their junction.

Visible Lines.—The visible lines of an object are represented by a full black line.

Invisible Lines.—Invisible lines or lines that are hidden are represented by a dash line, the dashes being about one-quarter of an inch long, the spaces between them being less than one-eighth of an inch. This line should be of the same strength as a visible line.

Working Lines.—Working lines are used to obtain certain results, and if left in pencil should be very light, or if shown in ink, should be very light red or short dash black lines.

Arrow Heads.—Arrow heads should always be in black and made with great care, their points just touching the line to be measured.

Dimensioning.—In placing the dimensions it is always well to group as far as possible and not scatter them over the entire drawing. As a rule the same measurement should not appear in more than one view. The measurement line upon which the dimension is placed should not be drawn too near the line measured, usually about one-quarter of an inch away. It is customary to place all dimensions over twelve inches, as feet and inches, thus: 5′-6″ (five feet and six inches), or if in even feet, thus: 3′-0″(three feet and no inches). When the space between two lines is not sufficient to place the measurements in the usual manner they may be placed thus:

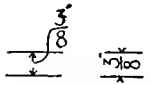

Horizontal measurements should read from left to right, and vertical measurements should read upward. Great care should be taken in making figures, as the worth and appearance of the drawing depend greatly upon them.

CHAPTER II.

GEOMETRICAL PROBLEMS.

Prob. 1.—To bisect a given straight line A B.

From points A and B as centers and with any radius greater than half of the line A B, describe arcs above and below, intersecting in points 1 and 2. Draw a straight line through points 1 and 2, cutting the line A B at 3, thus bisecting the given line A B.

Prob. 2.—To bisect an arc of a circle A B.

From a point A as center and with any radius greater than half of curve A B, draw arcs above and below. With B as center and the same radius, cut the arcs already drawn in points 1 and 2. Draw a straight line through points 1 and 2, intersecting the curve A B in 3, which will bisect the given arc A B.

Prob. 3.—To bisect a given angle A B C.

With B as center and any radius, draw an arc cutting the lines B A and B C in points 1 and 2. With points 1 and 2 as centers and any radius greater than half of arc 1-2, describe arcs intersecting in point 3. Draw a line through points B and 3 which will bisect the given angle A B C.

Prob. 4.—To trisect a given right angle A B C.

With B as center and any radius, draw an arc cutting the sides of the right angle in points

1 and 2. With points 1 and 2 as centers and the same radius, draw arcs cutting in 3 and 4. Draw lines B 4 and B 3 which trisect the given right angle A B C.

Prob. 5.—To divide a given straight line A B into 6 equal parts (applicable for any number).

Draw the line A C at any angle to A B; lay off on this line 6 divisions, each equal to about $\frac{1}{6}$ of A B. Connect points 6 and B by a straight line. From points 1, 2, 3, 4 and 5, draw lines parallel with 6 B cutting A B in a, b, c, d and e.

Prob. 6.—To divide line A B into the same proportional parts as the given line C D.

From point A draw a line at any angle to A B. Lay off on this line the points corresponding to points on line C D. Connect points 4 and B. From points 1, 2 and 3, draw lines parallel with 4 B, cutting the line A B in a, b and c.

Prob. 7.—To divide a circle having the center given, into 6 equal parts.

Draw the diameter 1-5. With points 1 and 5 as centers and radius 1-2 describe arcs cutting the circle in points 3, 4, 6 and 7, which, with points 1 and 5, are the desired divisions.

Prob. 8.—From point A above the given line B C, draw a perpendicular to B C.

With point A as center and any radius, cut B C in 1 and 2. With 1 and 2 as centers and any radius, draw arcs below. From A draw a straight line to point 3, which is the desired perpendicular.

Prob. 9.—On a given line A B to erect a perpendicular at point A.

With point A as center and any radius, draw an arc cutting A B in 1. With 1 as center and the same radius, lay off points 2 and 3. With points 2 and 3 as centers and any radius, describe arcs above, cutting in 4. Connect points 4 and A, thus erecting the desired perpendicular.

Prob. 10.—To draw a line C D parallel to a given line A B at a given distance, as E F above it.

Erect perpendiculars at points 1 and 2 by Prob. 9, lay off on these the distance E F, giv-

PROB. 1.

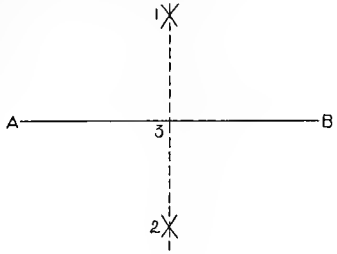

PROB. 2.

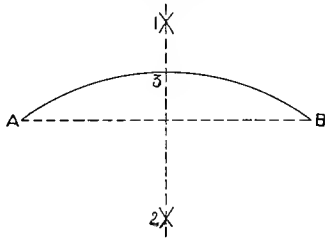

PROB. 3.

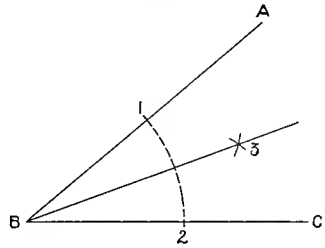

PROB. 4

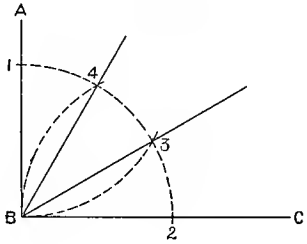

PROB. 5.

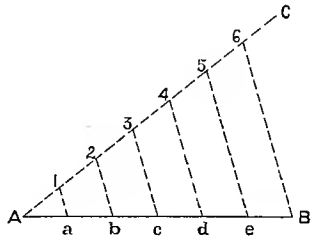

PROB. 6.

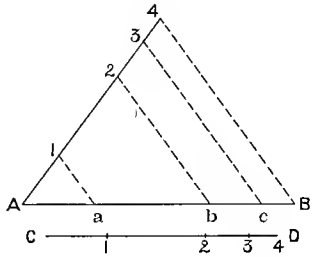

PROB. 7

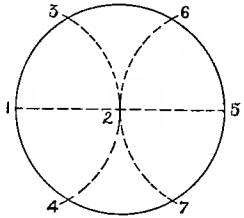

PROB. 8.

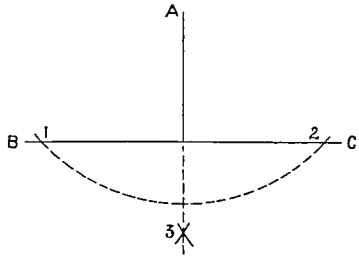

PROB. 9.

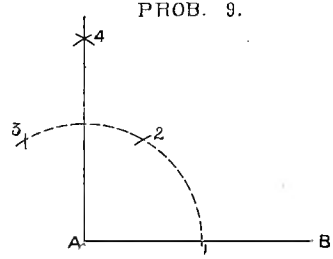

ing points 3 and 4. Draw line C D through 3 and 4.

Prob. 11.—Through point C draw the line D E parallel to A B.

With point C as center and any radius, describe an arc cutting A B in 1. With 1 as center and same radius, describe an arc which will cut line A B in 2. With 1 as center and radius C 2, describe an arc cutting 1-3 in 3. Draw a straight line through points 3 and C, which will be the required line D E.

Prob. 12.—To construct an angle equal to a given angle B A C.

Draw the line D F. With A as center and any radius, describe an arc cutting the sides of the angle in points 1 and 2. With D as center and the same radius, describe an arc cutting D F in 3. With radius 1-2, and 3 as center, describe an arc cutting 3-4 in 4. Draw D E through D 4. E D F is the angle required.

Prob. 13.—Through point F draw a straight line which would meet the intersection of A B and C D if continued.

Draw F 1 and F 2 at any angle. Connect 1-2. From point 3 anywhere on A B make 3-4 parallel with 1-2, 3 E parallel with 1 F, and 4 E parallel with 2 F. Pass a straight line through points F and E, which will be the desired line.

Prob. 14.—Find the mean proportion between the two lines A B and C D.

Lay off on E F, 1-2 equal to A B and 2-3 equal to C D. Bisect 1-3 in 4. With 4 as center and radius 4-1, describe a semicircle. From 2 erect a perpendicular (Prob. 9) to E F, cutting semicircle in 5. 2-5 will be the desired mean.

Prob. 15.—On the given line A B to construct a square.

Draw B 1 perpendicular to A B (Prob. 9) and equal to A B. With points A and 1 as centers and A B as radius, describe arcs cutting in 2. Draw A-2 and 2-1.

Prob. 16.—On a given line A B to construct an equilateral triangle.

With A and B as centers, and A B as radius, describe arcs cutting in 1. Draw A 1 and B 1.

Prob. 17.—Having given the three sides of a triangle, as A B, C D and E F, to construct the figure.

With point B as center and the radius C D

PROB. 10.

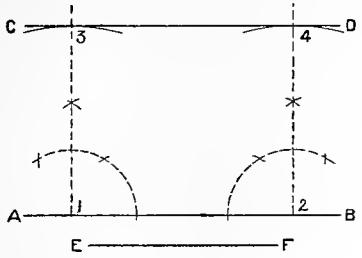

PROB. 11.

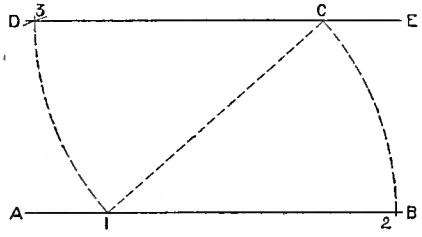

PROB. 12.

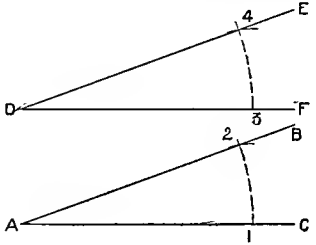

PROB. 13.

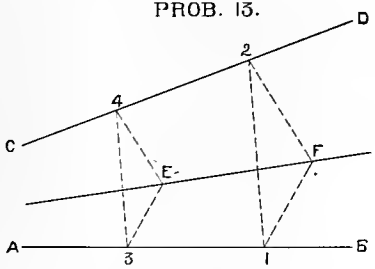

PROB. 14.

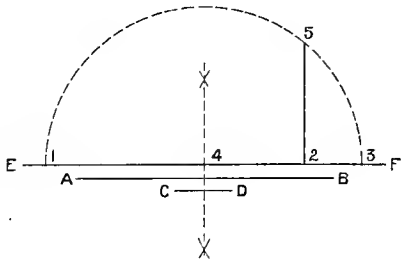

PROB. 15.

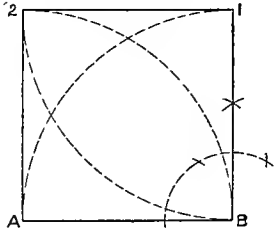

PROB. 16.

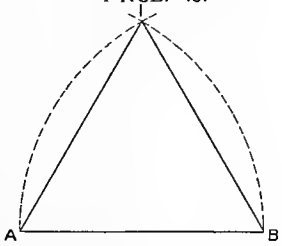

PROB. 17.

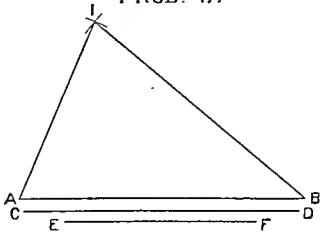

PROB. 18.

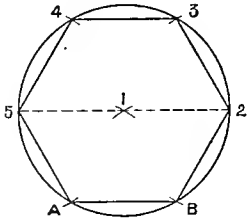

describe an arc. With point A as center and E F as radius, describe an arc cutting the first in 1. Draw A 1 and B 1.

Prob. 18.—On a given base A B to construct a regular hexagon.

With A and B as centers and A B as radius, describe arcs cutting in 1. With 1 as center and the same radius, describe a circle. A B is equal to $\frac{1}{6}$ of its circumference. Step off points 2, 3, 4 and 5, and draw B-2, 2-3, 3-4, 4-5 and 5-A.

Prob. 19.—Within a given square A B C D to inscribe an octagon.

Draw the diagonals A C and B D, intersecting in 1. With A, B, C and D as centers and radius A 1, describe arcs 2-3, 4-5, 6-7 and 8-9: draw 3-6, 5-8, 7-2 and 9-4.

Prob. 20.—On a given line A B to construct a pentagon.

With A and B as centers and radius A B, describe arcs cutting in 1 and 2. Connect 1 and 2. With 1 as center and the same radius, describe an arc cutting at 3, 4 and 5. Pass a line through 3-4 to 6, and one through 5-4 to 7. With 7 and 6 as centers and radius A B, describe arcs intersecting in 8. Draw A 7, 7-8, 8-6 and 6 B.

Prob. 21.—On a given base A B to construct an octagon.

Erect perpendiculars at A and B. Bisect the exterior angles and set off A 1 and B 2 equal to A B. Connect 1-2, cutting the perpendiculars in 3 and 4. Make 3-5 and 4-6 equal to 3-4. Extend line through 5-6 indefinitely. Make 5-7, 6-8, 5-9 and 6-10 equal to 3 A. Draw A 1, 1-7, 7-9, 9-10, 10-8, 8-2 and 2 B.

Prob. 22.—Within a given equilateral triangle A B C to inscribe a circle.

Bisect the angles of the triangle by Prob. 3. The bisectors will intersect in 1. The perpendicular distance from 1 to any side of the triangle will be the radius of the desired circle Note, this problem is true in any form of triangle.

PROB. 19.

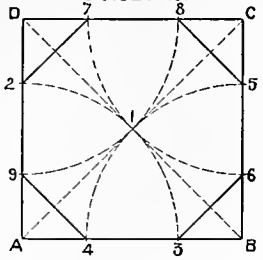

PROB. 20.

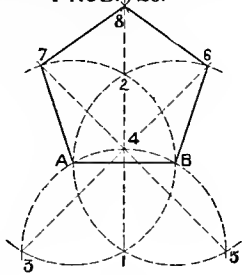

PROB. 21.

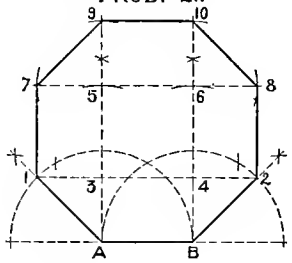

PROB. 22.

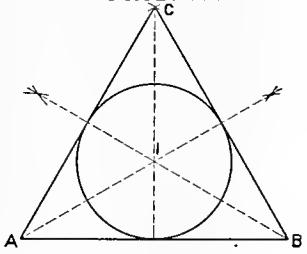

PROB. 23.

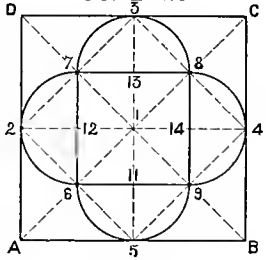

PROB. 24.

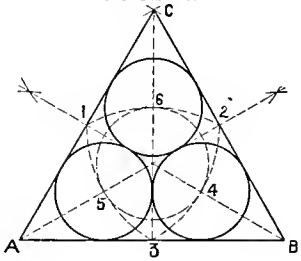

PROB. 25.

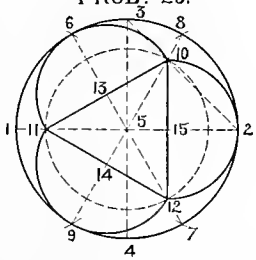

PROB. 26.

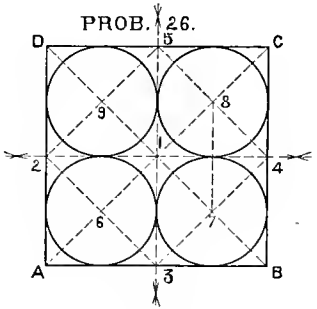

PROB. 27.

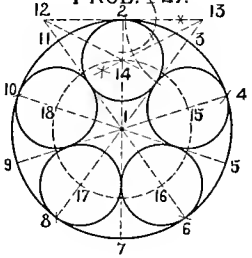

Prob. 23.—Within a square A B C D to inscribe four semicircles, each touching one side of the square and their diameters forming a square.

Draw diagonals A C and D B, intersecting in 1. Draw diameters passing through 1. Draw 2-3, 3-4, 4-5 and 5-2. Draw 6-7, 7-8, 8-9 and 9-6, which give us points 11, 12, 13 and 14, the centers of the required semicircles.

Prob. 24.—Within a given equilateral triangle A B C to inscribe three equal circles, each touching two sides of the triangle and two other circles.

Bisect the angles of the triangle, letting the bisectors cut the sides of the triangle in 1, 2 and 3. With centers 1, 2 and 3 and radius 1-2, describe arcs cutting bisectors in 4, 5 and 6, the centers of the required circles. A perpendicular (Prob. 8) from the center of any circle to the side of the triangle will determine the radius of the circle, and also the point of tangency.

Prob. 25.—Within a given circle to inscribe three semicircles, each touching the circumscribing circle, and their diameters forming a regular triangle.

Draw two diameters, 1-2 and 3-4 at right angles to each other, intersecting in 5. Divide the circle into twice as many parts as there are semicircles to be inscribed, beginning at 1. Draw diameters 6-7 and 8-9. Connect 2-3, cutting diameter 8-9 in 10, which locates one point of the required triangle. With 5 as center and radius 5-10, set off 11 and 12, which when connected form the triangle. Draw 10-11, 11-12 and 12-10, giving points 13, 14 and 15, the centers of the required semicircles.

Prob. 26.—Within a given square A B C D to inscribe four equal circles, each tangent to two others and two sides of a square.

Draw the diagonals and the diameters intersecting in 1 and giving points 2, 3, 4 and 5. Connect points 2-3, 3-4, 4-5 and 5-2, intersecting diagonals in 6, 7, 8 and 9, which will be the centers of the required circles.

Prob. 27.—Within a given circle to inscribe any number of equal circles which shall be tangent to two others and to the circumscribing circle. In this problem, five.

Divide the circumference of the circle into twice as many equal parts as there are to be circles inscribed. Produce the diameters on

either side of 2-7 until they meet a perpendicular erected to 2-7 at 2. Bisect angles 12 and 13 and let bisectors cut diameter 2-7 in 14. With 1 as center and radius 1-14, draw a circle cutting diameters in 15, 16, 17 and 18, the centers of the required circles.

Prob. 28.—To draw a line tangent to a given circle through a given point A.

Pass a line through center 1 and point A indefinitely. With point A as center and any radius, cut this line in points 2 and 3. With 2 and 3 as centers and any radius, describe arcs cutting in 4 and 5. Connect 4 and 5, which will be the desired line.

Prob. 29.—To draw a line tangent to a given point A in a circle when the center is not accessible.

Draw any chord A 1. Bisect the chord and arc (Probs. 1 and 2) in 2 and 3. With A as center and A 3 as a radius, draw an arc 4-5; with 3 as center and 3-5 as a radius, draw an arc cutting 4-5 in 4. Draw line through A 4 tangent to the circle.

Prob. 30.—Draw a circle tangent to a given point C in line A B and through the fixed point D without the line.

At point C erect a perpendicular (Prob. 9). Connect C D and draw a perpendicular to its center (Prob. 1) intersecting the first perpendicular in 1, which is the center of the required circle.

Prob. 31.—Draw a circle tangent to a given circle A, also to a given line B C at a given point D in the line.

Pass a line through D perpendicular to B C. Lay off D 1 the length of the radius of circle A and draw A 1. Draw perpendicular to A 1 (Prob. 1) intersecting the line 1 D in 2, which is the center of the required circle. 3 and D are the points of tangency.

Prob. 32.—At a given point E in line D B draw two arcs of circles tangent at this point and to the two lines A B and C D.

Make B 1 equal to B E. Make D 2 equal to D E. Draw E 3 perpendicular to D B, 1-4 perpendicular to A B and 2-3 perpendicular to C D. Points 3 and 4 are the centers of the required arcs.

Prob. 33.—Having given parallel lines A B and C D, to connect by two arcs of circle which shall be tangent at points B and C and pass through point E, which is anywhere on line B C.

At B and C erect perpendiculars. Bisect B E and E C, intersecting the perpendiculars in 1 and 2, the centers of the required arcs.

Prob. 34.—To draw an ellipse by means of a trammel, having the axes given.

The semi-diameters of the ellipse are represented by A B and A C. Lay off on the straight edge of a piece of paper 1-2 equal to A B, also 3-2 equal to A C. Keeping point 1 on the short diameter and point 3 on the long, mark off as many points at 2 as desired to form the curve of the ellipse.

Prob. 35.—To draw a line tangent to an ellipse at any given point, as E, in the curve.

With point C as center and A 1 as radius, describe an arc cutting diameter A B in F and F′, which points are called foci. Extend a line from F′ through E indefinitely. Make E 2 equal to E F. Bisect the angle F E 2, giving the desired tangent.

Prob. 36.—To draw a line tangent to an ellipse, passing through a given point E without it.

Find the foci as in Prob. 35. With point E as center and radius E F, describe an arc. With F′ as center and A B as radius, describe an arc cutting the first arc in points 1 and 2. Connect F′ 1 and F′ 2, cutting the ellipse in points 3 and 4. Draw lines from E through 3 and 4, which will be tangent at 3 and 4.

PROB. 28.

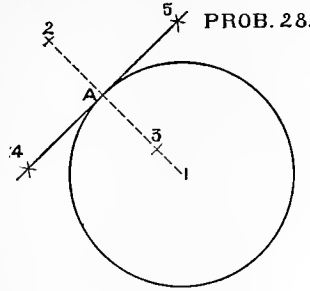

PROB. 29.

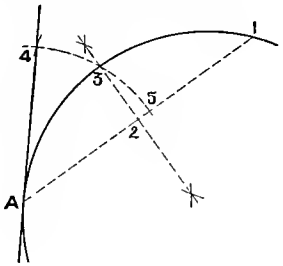

PROB. 30.

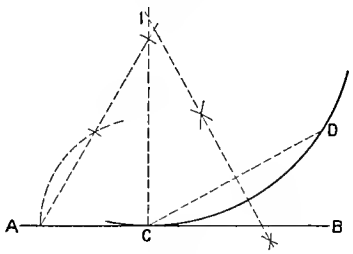

PROB. 31

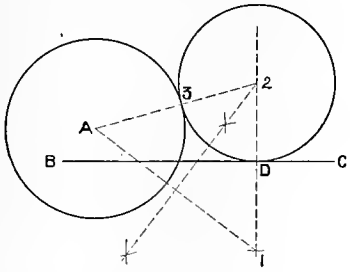

PROB. 32.

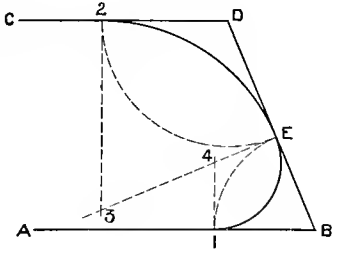

PROB. 33.

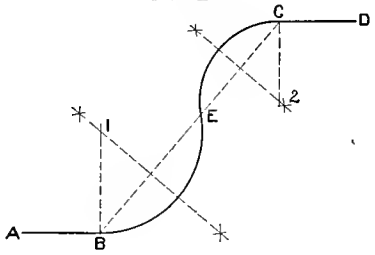

PROB. 34.

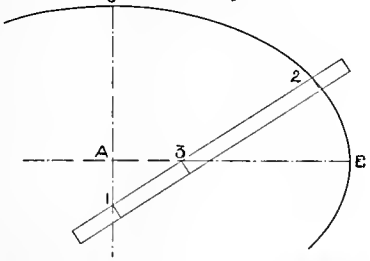

PROB. 35.

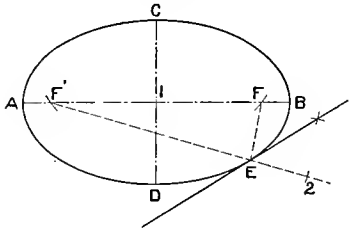

PROB. 36.

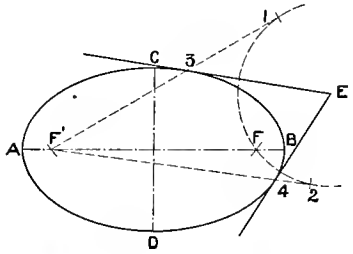

CHAPTER III.

SIMPLE PROJECTION, INTRODUCING THE PRINCIPLES OF WORKING DRAWINGS.

THE working drawings of any object are such drawings, accompanied by the proper measurements, as will tell all the facts concerning that object. Such drawings if sent to a mechanic would be sufficient to enable him to perform the desired piece of work without further explanation. The number of views required depends entirely upon the character of the subject to be drawn; for instance, in Plate 5, Fig. 1, two views are sufficient to tell all that concerns the cube, whereas for a more complicated object three or even more views may be necessary to tell all the facts.

Plate 5.—To draw the front and top views of the cube in three positions.

Fig. 1 represents the cube so placed in the top view that two edges are parallel to an imaginary horizontal line. In drawing the front view we suppose the cube to be resting upon a horizontal plane upon one of its faces, and so placed as to appear as a square if seen directly in front. In the top view we are supposed to be looking down upon the cube, its position being unchanged. As noted before, the cube will be seen as a square in both the front and top views, and these should appear directly above one another. The space between the two views is immaterial, but should be such as to appear well on the sheet. The horizontal lines should be drawn with a T-square, having its head against the left-hand edge of the board, whereas the vertical lines should be drawn with a triangle resting on the edge of the T-square blade. Only three measurements are necessary. They should be carefully placed as indicated in the drawings, the arrow heads just touching the

CUBE

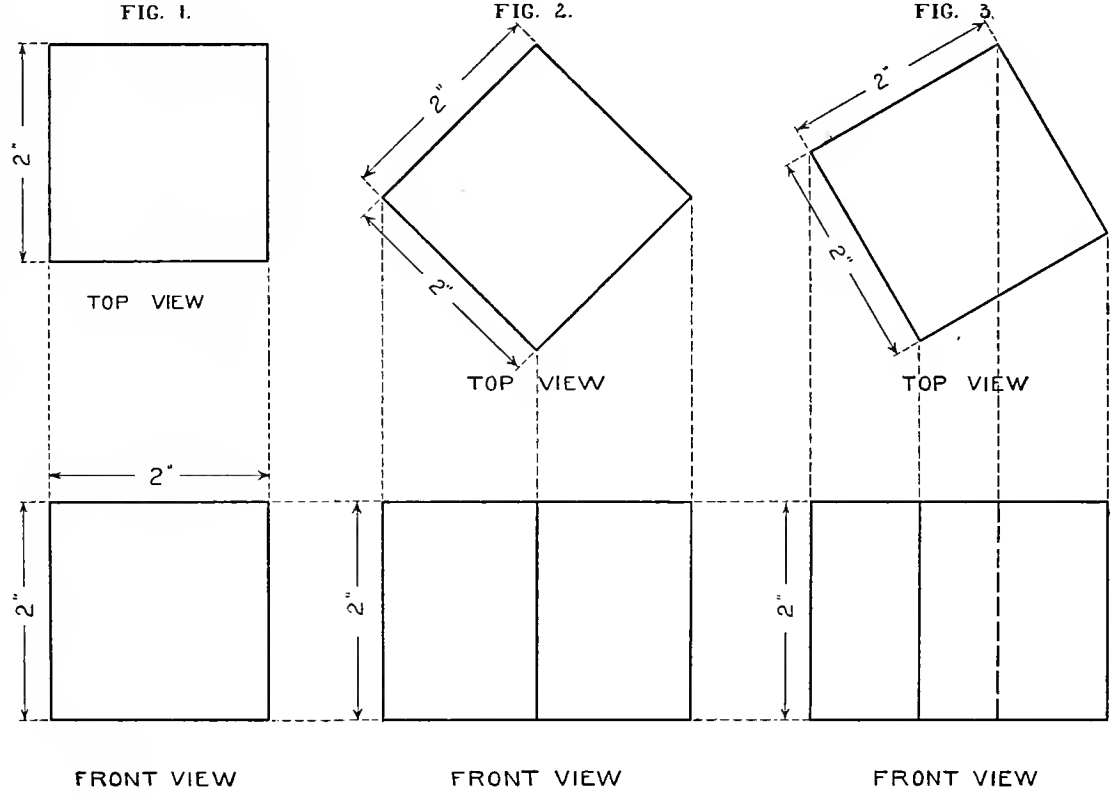
FIG. 1.
2"
TOP VIEW
2"
2"
FRONT VIEW
FIG. 2.
2"
2"
TOP VIEW
2"
FRONT VIEW
FIG. 3.
2"
2"
TOP VIEW
2"
FRONT VIEW

extension lines from those that they measure, not overrunning or falling short.

Fig. 2 represents the cube turned in the top view so that its edges make angles of 45° with an imaginary horizontal line.

Fig. 3 represents the cube turned in a similar manner, but at angles of 30° and 60° with a horizontal line. In both of these figures the top views should be drawn first. From them project down and construct the front views directly opposite the front view in Fig. 1. These problems should be lined-in with a medium grade pencil, making the result lines, or, in other words, the outlines of the cubes, strong and black, uniform in thickness throughout the drawing, and much resembling an inked line. Extension lines should be at right angles to the lines to be measured, and measurement lines should be left light. Care should be given to printing and figuring, as the appearance of the sheet depends much upon this feature of the work. Figs. 2 and 3 are not necessary as working drawings of a cube, but are given as simple exercises for the use of the T-square and triangles, and as a method of representing foreshortened surfaces and of placing measurements upon inclined lines.

Plate 6.—Fig. 1 represents the front, top and side views of an equilateral triangular prism placed so that two of its faces are equally visible in the front view. In this drawing the top view should first be made, from which the front and side views are projected. The student should take notice that the width of the side view is equal to the altitude of the triangles formed by the top view and not to one of its sides, as many beginners are apt to suppose.

Fig. 2.—Draw the front and top views of a regular hexagonal prism according to the measurements given. In this, as in Fig. 1, the top view should be drawn first and the front view projected directly below. Both the triangle in Fig. 1 and the hexagon in Fig. 2 may be constructed by the use of the 30° and 60° triangle, or more accurately, by the use of the compasses as given in geometric problems 16 and 18.

TRIANGULAR AND HEXAGONAL PRISMS

FIG. 1.

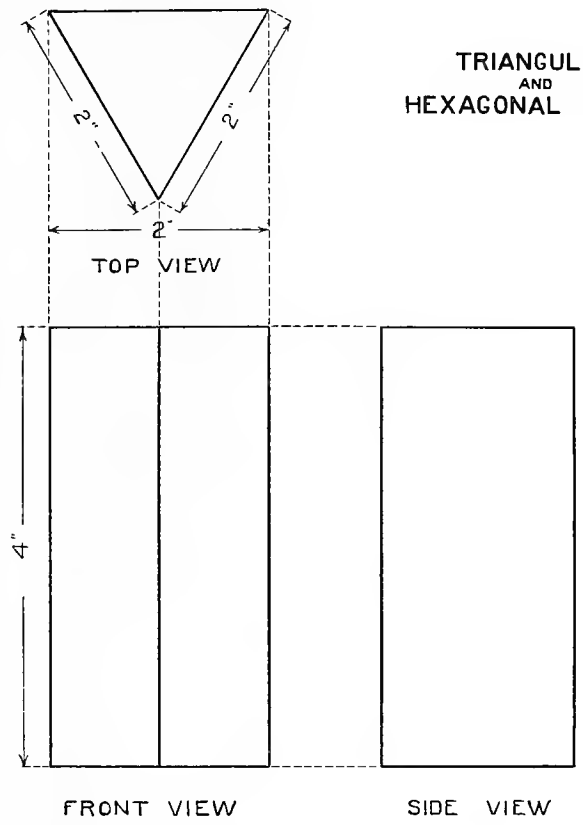

FIG. 2.

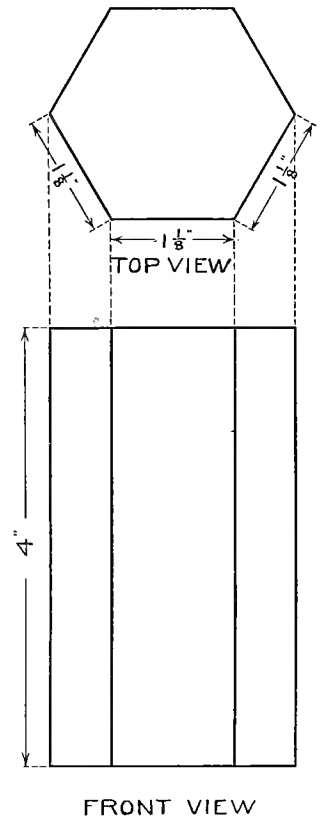

Plate 7.—The drawing at the left represents the front and top views of a square pyramid. Note that the height of the pyramid is given on a measurement line parallel to the axis and not parallel to the slant line of the pyramid.

The chimney model is represented by front and top views and a vertical section ; this section is supposed to be cut through line A and the front half removed. The surface cut by this vertical plane is section lined at 45°. Different pieces of material adjoining one another are section lined in different directions as shown in this problem.

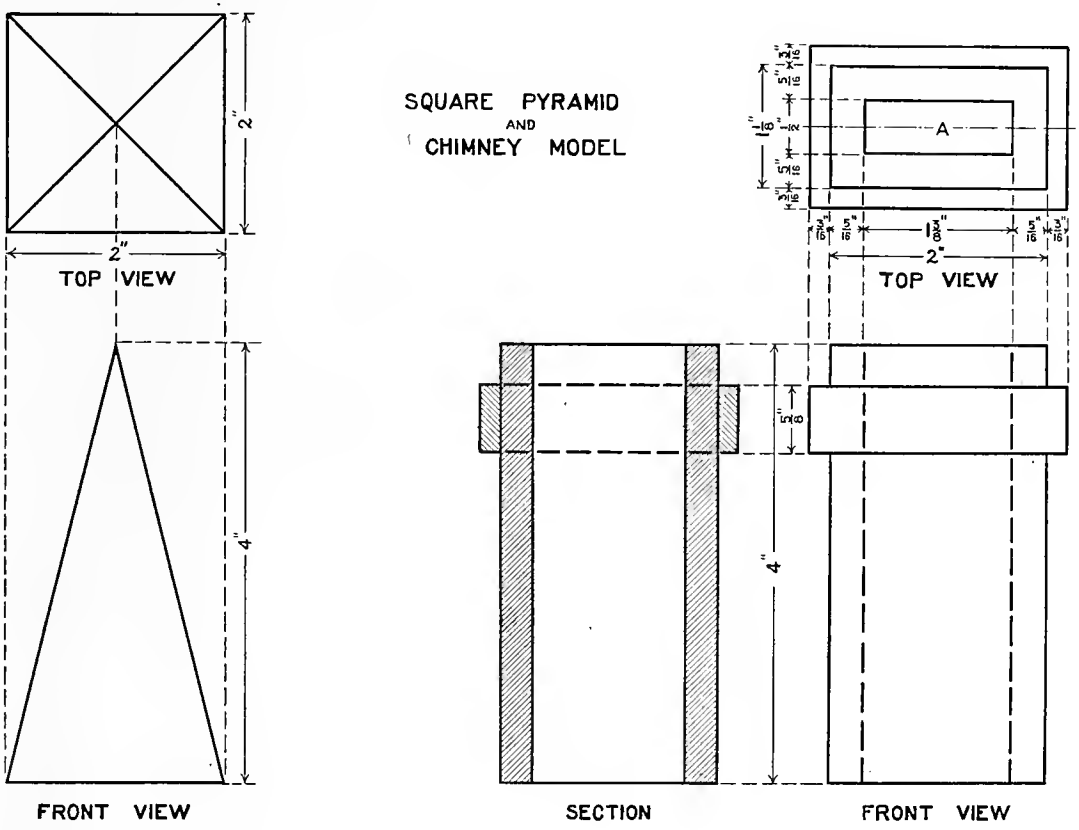
SQUARE PYRAMID
AND
CHIMNEY MODEL
2"
2"
TOP VIEW
4"
FRONT VIEW
A
2"
TOP VIEW
4"
SECTION
FRONT VIEW

Plate 8.—The drawing at the left represents the front and top views of a paneled prism turned at an angle of 30° and 60°. The top view should be drawn first; the main lines of the prism and the vertical lines of the panel may then be projected down to their respective places as indicated by the connecting lines. In the drawing at the right we have the front and top views, and a vertical section of a hollow flanged cylinder. The top view should be drawn first, as in nearly all cases when the object is based upon the cylinder. As but one piece of material is shown in the section, all the section lines run in the same direction. In mechanical drawing, the front view of objects based upon the cylinder are frequently represented half in elevation and half in section, instead of making a separate drawing of the section, as in this case.

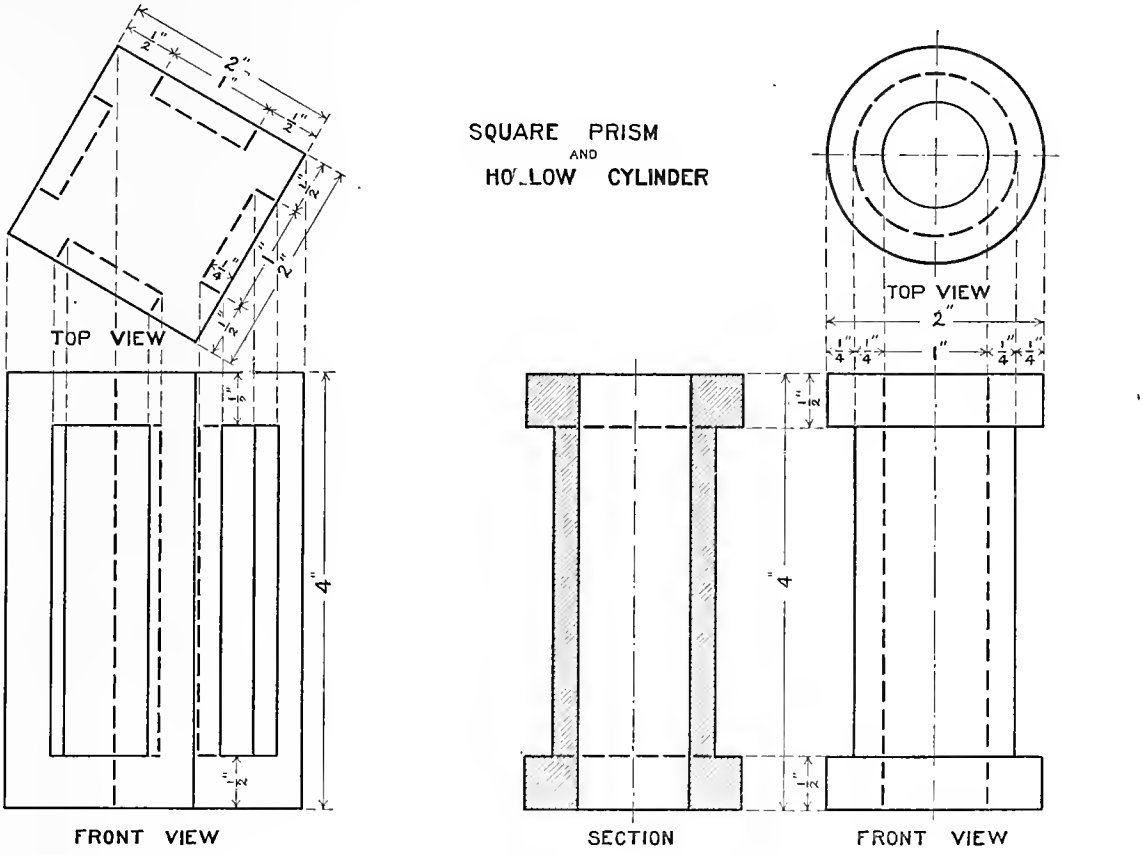
SQUARE PRISM
AND
HOLLOW CYLINDER
TOP VIEW
FRONT VIEW
TOP VIEW
SECTION
FRONT VIEW
2"
1"
4"

Plate 9.—Draw the front, top, right and left side views of a cylinder and a cube, as placed in the drawing. Locate the top view, from which project points down, so placing the objects in the front view. The spaces A′, B′, C′, D′ and E′ of the right side view are equal to spaces A, B, C, D and E of the top view The vertical heights in the side views are equal to those of the front.

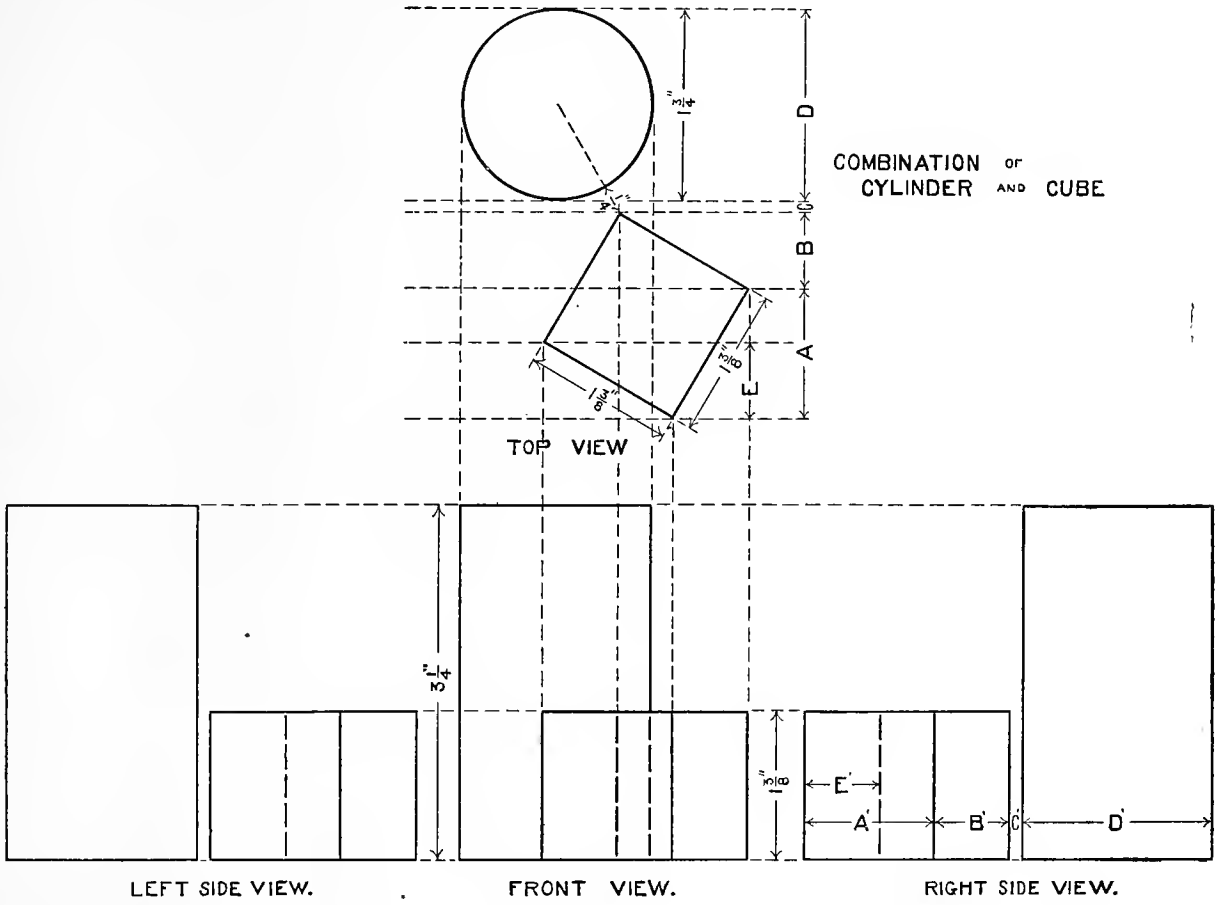
COMBINATION or CYLINDER AND CUBE
1 3/4"
D
B
A
E
1 3/8"
1 3/4"
TOP VIEW
3 1/4"
1 3/8"
E'
A'
B'
C'
D'
LEFT SIDE VIEW.
FRONT VIEW.
RIGHT SIDE VIEW.

Plate 10.—Fig. 1 represents the front and top views of a hexagonal prism. In the front view this object shows two of its faces equally and is so inclined that its base makes an angle of 30° with the horizontal plane. First, draw the front view, making the short lines at 30° and the long lines at 60°, and the distances A and B in the front view equivalent to A′ and B′ in the diagram Fig. 2; this diagram being a regular hexagon. In the top view the distances C, D and E are equal to C′, D′ and E′ in the diagram. Having obtained the position of these horizontal lines, project points in the front view to corresponding lines in the top view, giving points to be connected by straight lines.

Fig. 3.—The top view as shown in this figure is the same as in Fig. 1, but turned at an angle of 45°. The front view of this object in the turned position must be quite different in appearance from that in Fig. 1; but all its points will appear to be at the same height as before it was revolved. This being so, we have simply to project corresponding points in the top and front views until the lines intersect, giving the several points, which are connected by straight lines. For instance, point F may be traced from one view to another, as shown in the drawing.

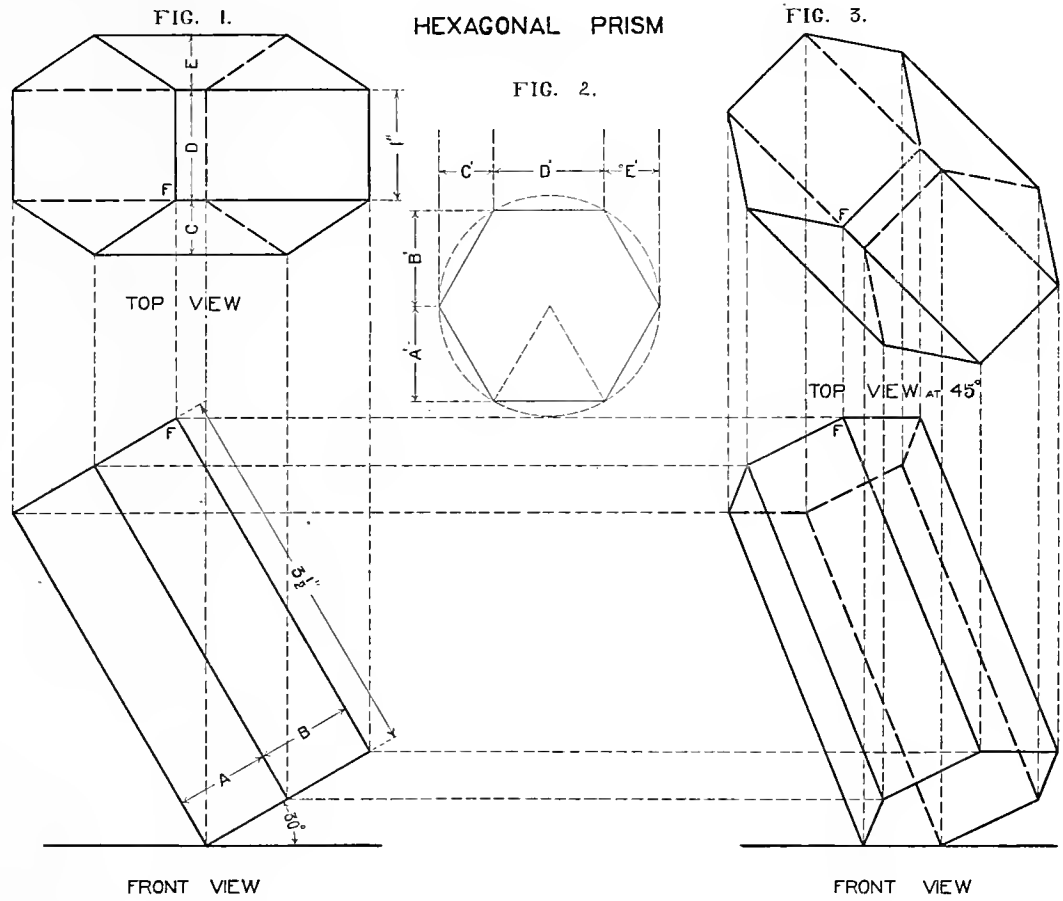
FIG. 1.
HEXAGONAL PRISM
FIG. 2.
FIG. 3.
E
D
C
F
l
TOP VIEW
C'
D'
E'
B'
A'
TOP VIEW AT 45°
F
3½"
B
A
30°
FRONT VIEW
FRONT VIEW

Plate 11.—In this plate we have the hexagonal prism resting across the square prism, their projections to be carried out precisely as in the plate preceding. To find the projection of the hexagonal prism as shown on the left portion of the plate, proceed as in Plate 10. Measurements should be placed only upon lines that are not foreshortened.

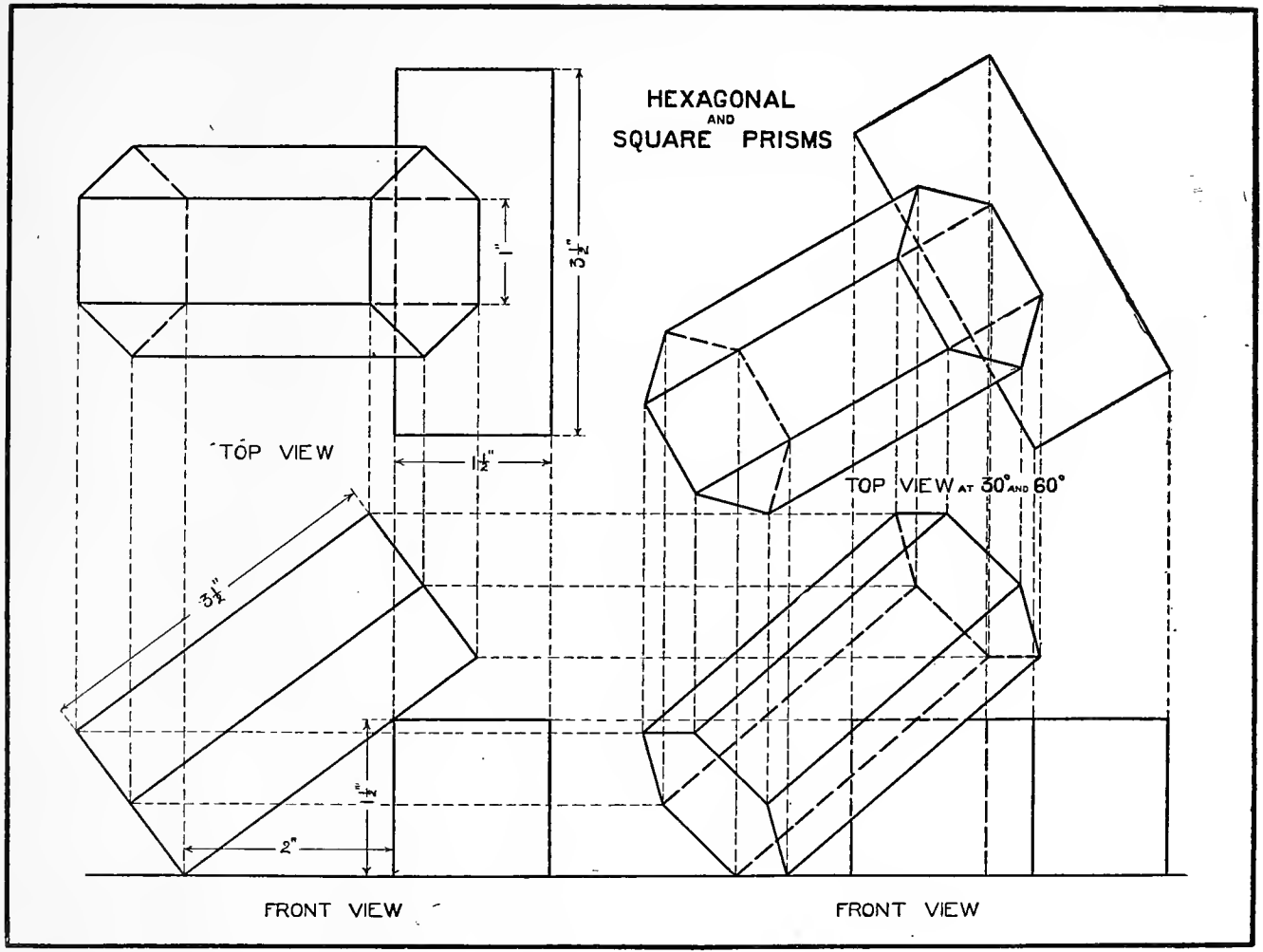
HEXAGONAL
AND
SQUARE PRISMS
1"
3½"
TOP VIEW
1½"
TOP VIEW AT 30° AND 60°
3½"
1½"
2"
FRONT VIEW
FRONT VIEW

CHAPTER IV.

STRUCTURAL DETAILS.

PLATES 12, 13 and 14 are given to acquaint the student with the exact shapes given to the principal members that enter into the steel structure. He should make careful drawings, full size, according to the given measurements, which are taken directly from the standards used by the leading rolling mills of America.

The slant for the flange in both the I and channel beams is drawn to the American Standard of one to six, or $16\frac{2}{3}$ per cent. Fillet A in both the I and channel beam is formed by an arc whose radius is $\frac{6}{10}$ the thickness of the web at its thinnest section. Fillet B is formed by an arc whose radius is equal to the thickness of the web plus $\frac{1}{10}$ of an inch.

If the student cannot secure an engineer's scale, he may reduce the decimal fractions to the nearest sixteenth or thirty-second of an inch. With care the scale illustrated below can be made on a heavy paper. This will give any measurement necessary from $\frac{1}{100}$ of an inch to six inches.

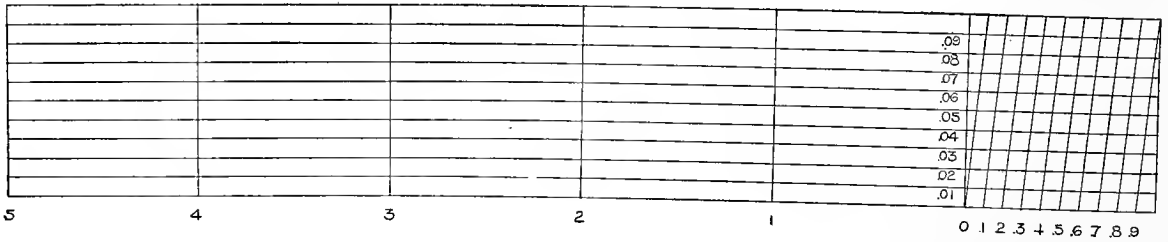

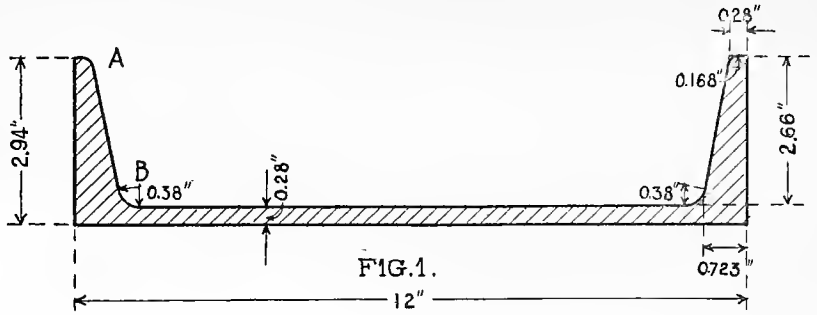

FIG. 1.

CHANNEL

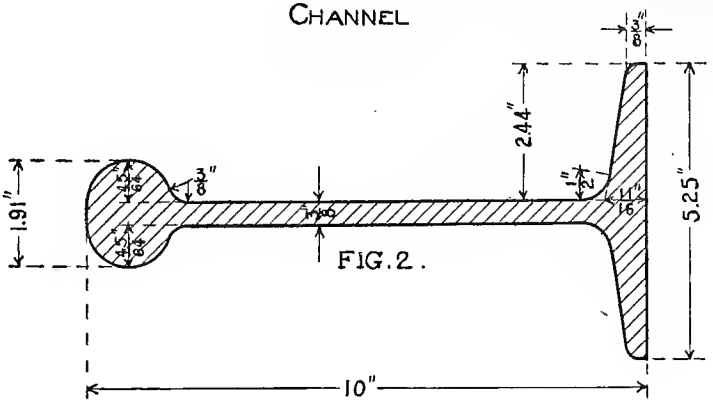

FIG. 2.

DECK BEAM

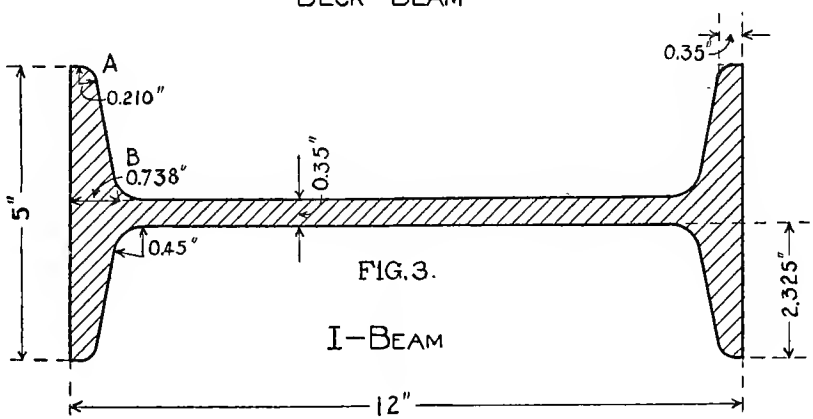

FIG. 3.

I-BEAM

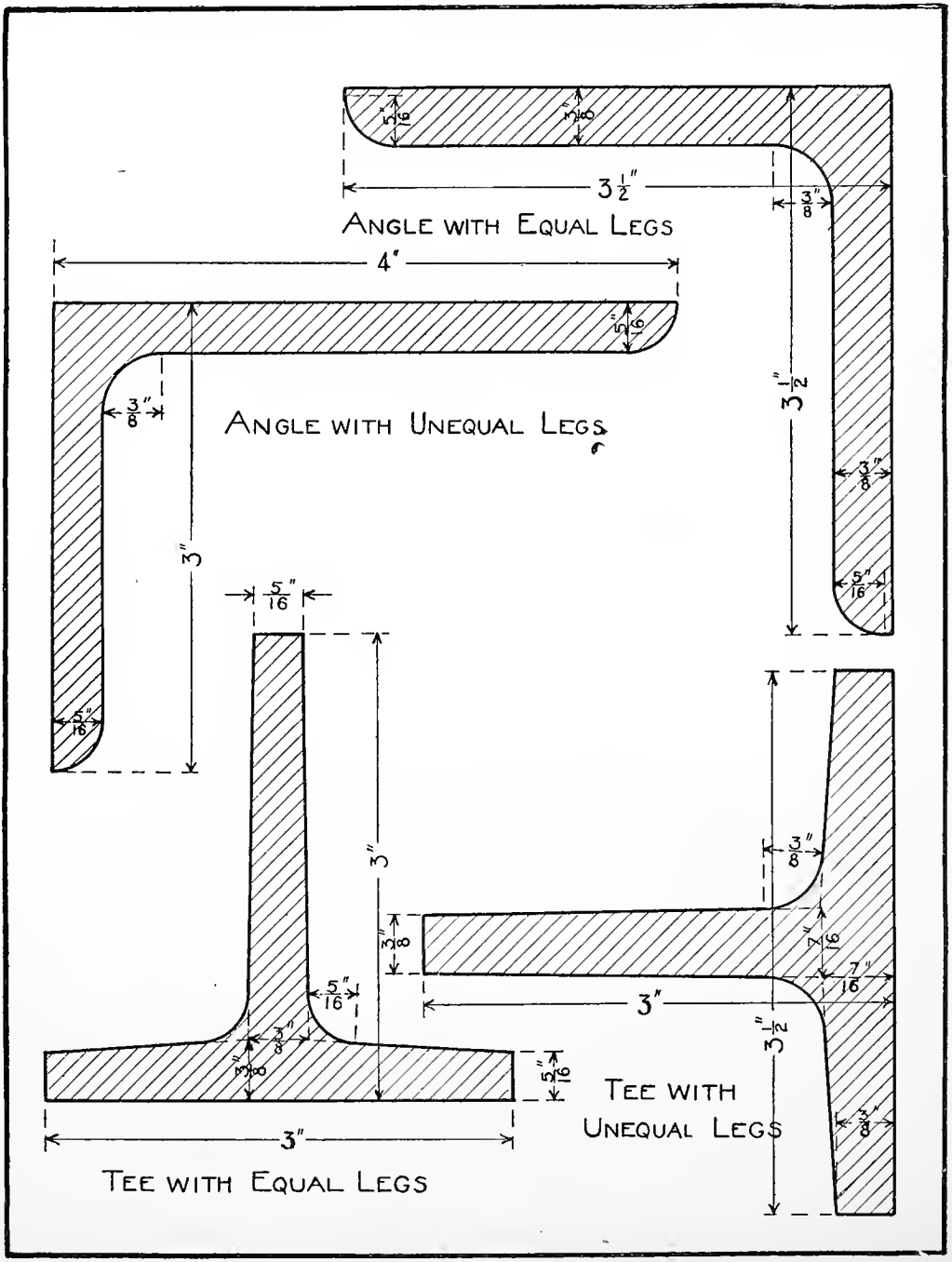
3 1/2"
ANGLE WITH EQUAL LEGS
4"
ANGLE WITH UNEQUAL LEGS
3"
3"
3"
TEE WITH EQUAL LEGS
TEE WITH UNEQUAL LEGS

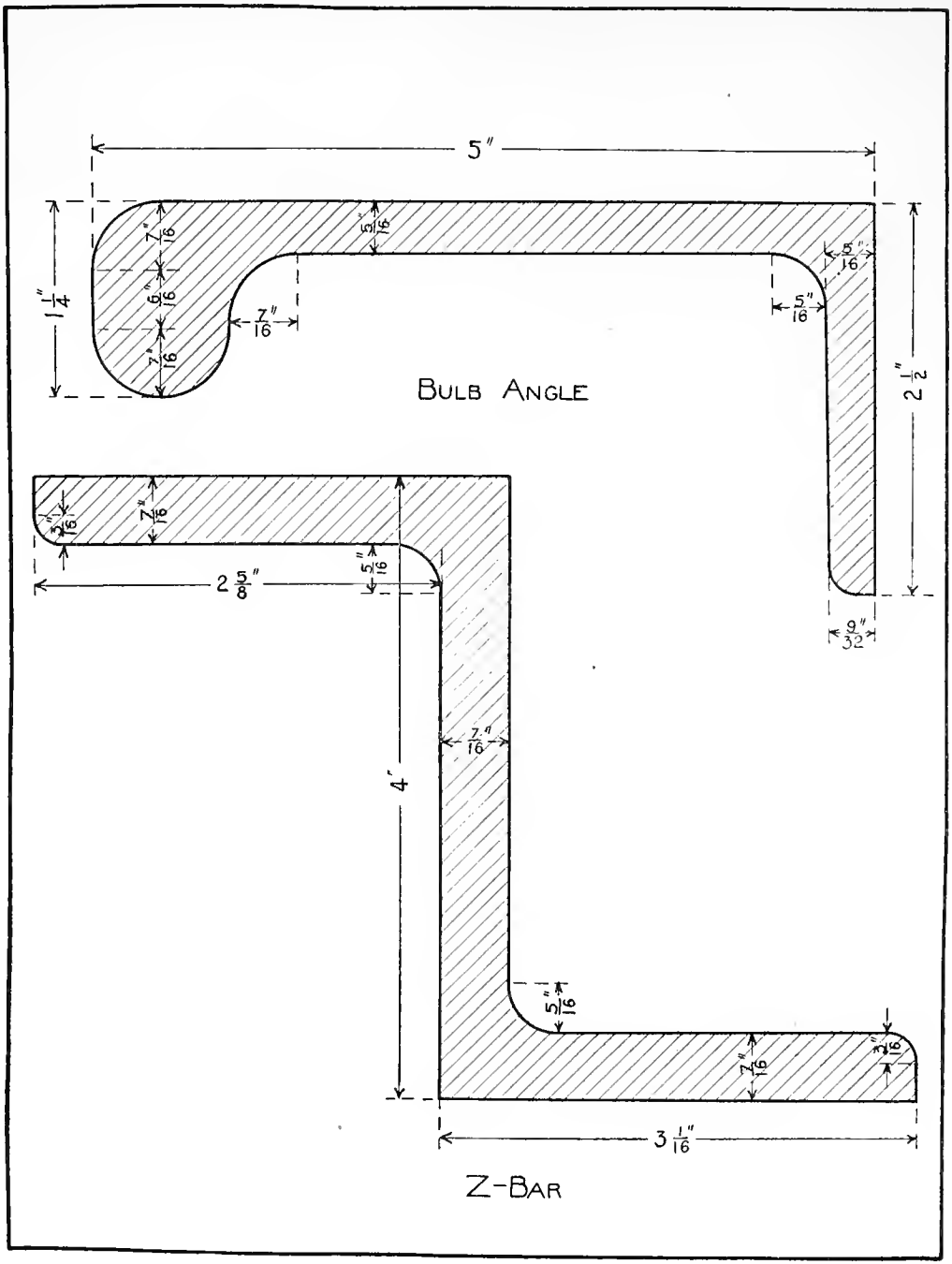
5"
1 1/4"
7/16"
6/16"
7/16"
7/16"
5/16"
5/16"
5/16"
2 1/2"
9/32"
BULB ANGLE
3/16"
7/16"
2 5/8"
5/16"
4"
7/16"
5/16"
7/16"
3/16"
3 1/16"
Z-BAR

Plates 15, 16, 17 and 18 are not given as exercises in drawing, but as reference plates. Thus, Plate 15 presents the principal I and channel beams in general use. The student will notice that only a portion of the I and channel beam is shown in each case, just enough to give all the measurements necessary to make the completed drawing. For instance, the drawing in the upper left-hand corner presents the measurements for a 3″ I beam.

DIMENSIONS OF I-BEAMS AND CHANNELS

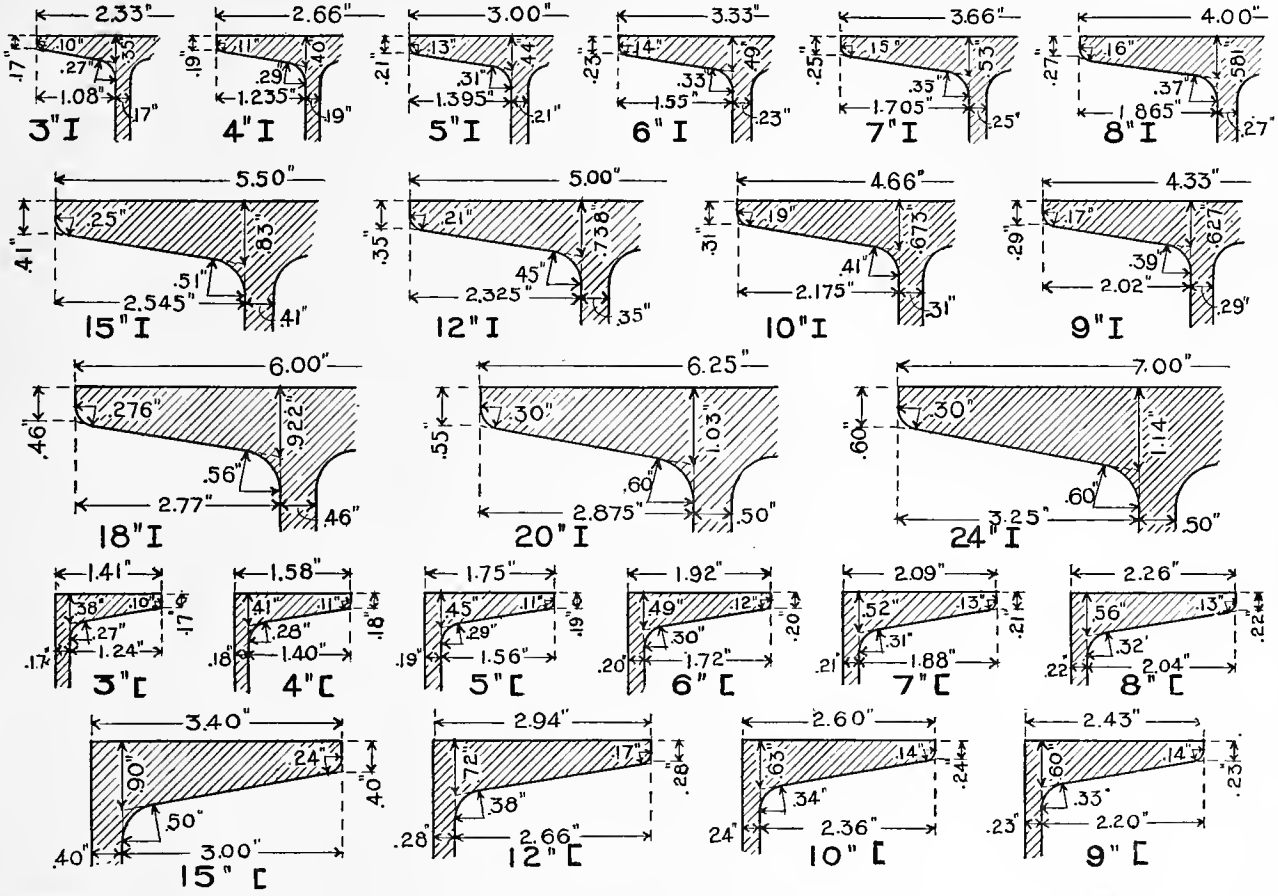

DIMENSIONS OF ANGLES

ANGLES WITH EQUAL LEGS

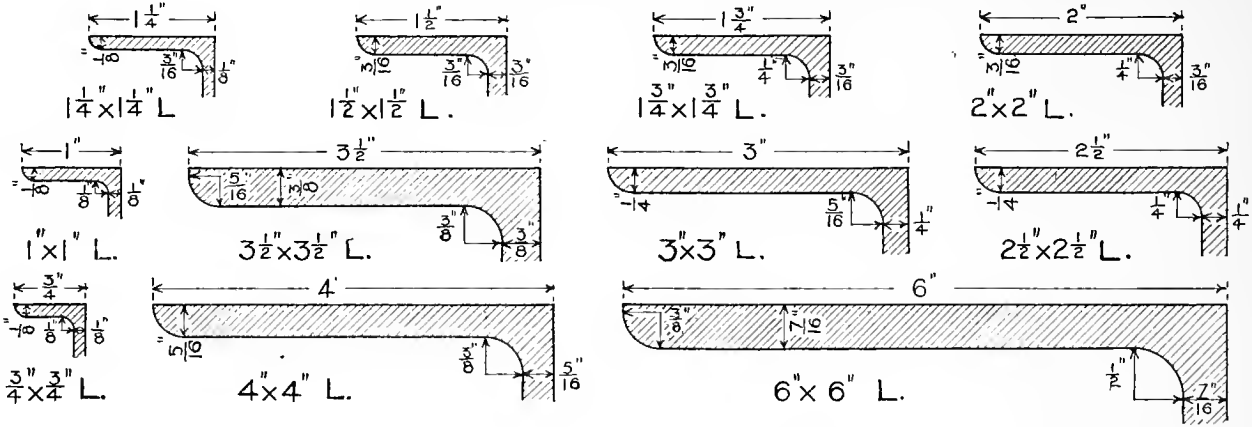

ANGLES WITH UNEQUAL LEGS

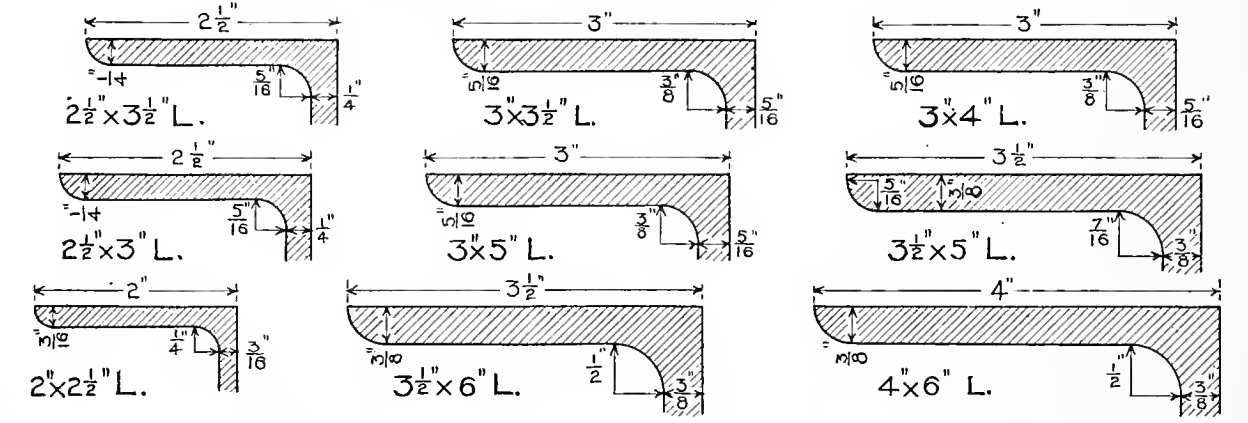

DIMENSIONS OF TEES

TEES WITH EQUAL LEGS

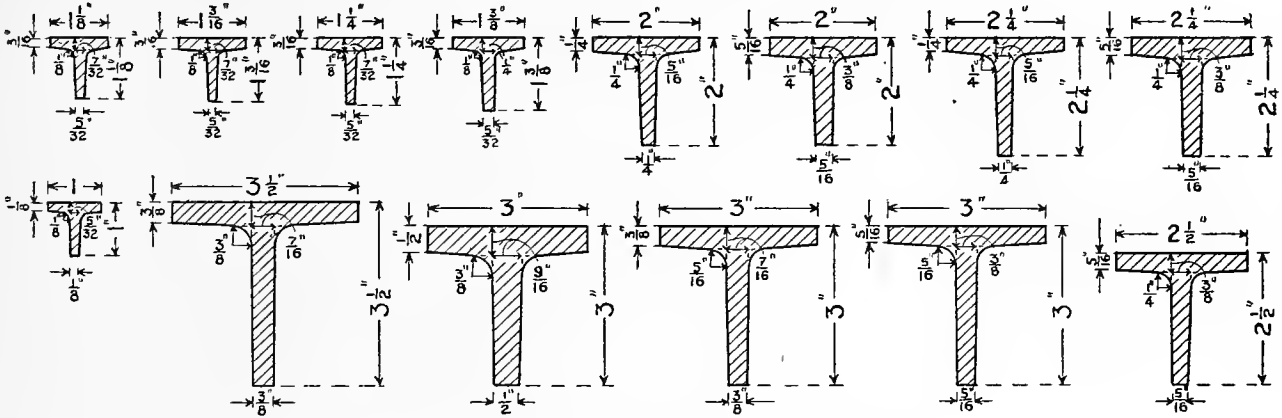

TEES WITH UNEQUAL LEGS

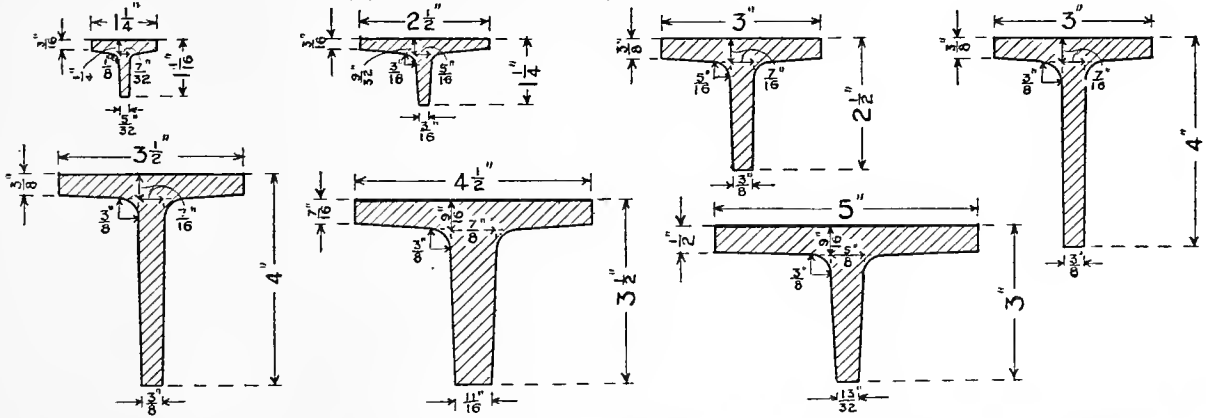

DIMENSIONS OF Z-BARS

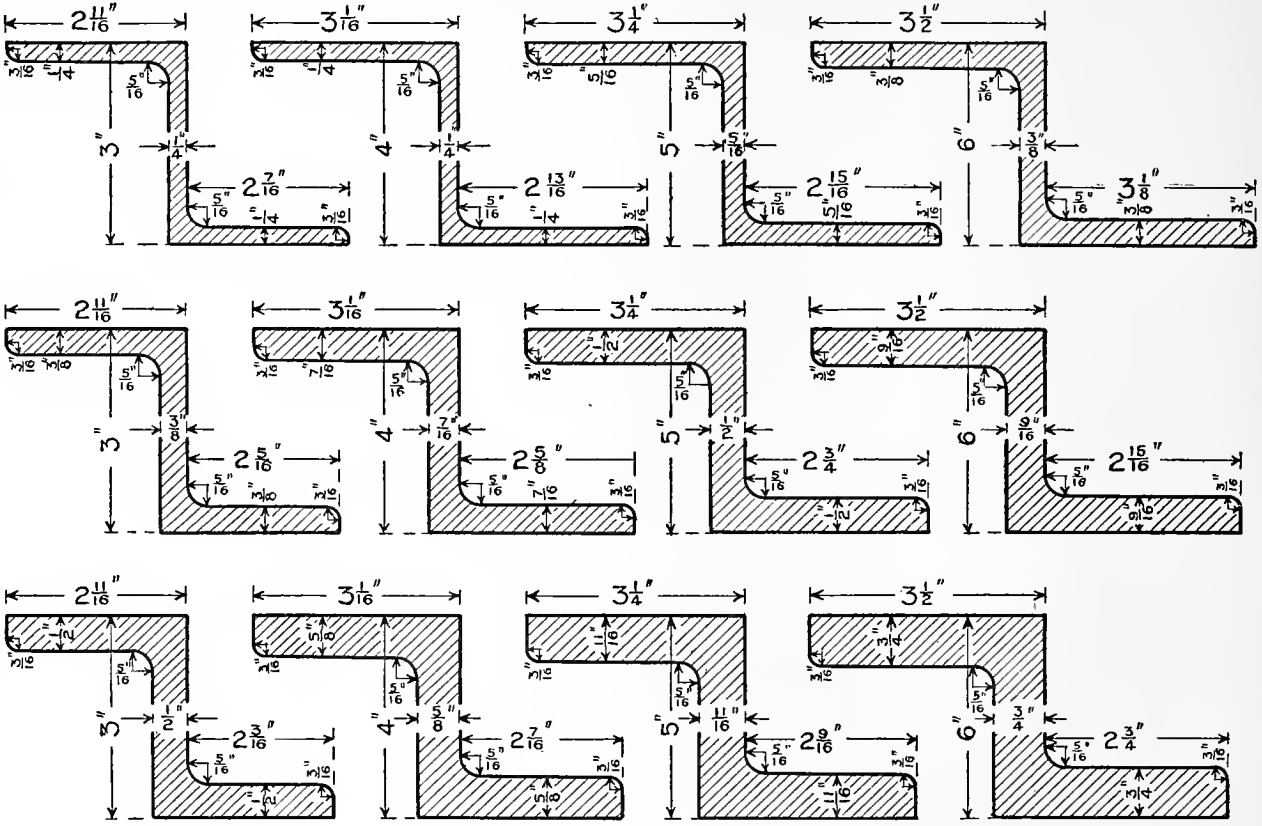

Plate 19.—Fig. 1 presents the conventional method of representing the hexagonal nut. The student will see by the table of approximate proportions that the nut is drawn to fit a bolt $\frac{3}{4}''$ in diameter. Arc A-B is struck from center C limiting the arcs struck from D and E as shown by the dotted lines.

Fig. 2 presents the conventional method of representing a bolt with a square head and nut. The student should note that the slant of the threads is equal to one half the space between two adjoining threads; that is, A is equal to one half B.

The drawings on the lower half of the plate give the exact shapes of completed rivet heads. The distance A is governed by the thickness of the plates riveted. In a scale drawing the head of the rivet is always drawn as a semicircle; but in copying this the student should use the three centers, as indicated, to acquire a better appreciation of the true shape of the head.

Approximate Proportions

Considering the diameter of bolt as unity (U), make

Side of Sq. Nut $1\frac{3}{4}$U – Depth 1U –

" " " Head $1\frac{1}{2}$U – " $\frac{3}{4}$U –

Long diameter Hex.-Nut 2U – Depth 1U –

" " " Hex.-Head $1\frac{3}{4}$U – " $\frac{7}{8}$U –

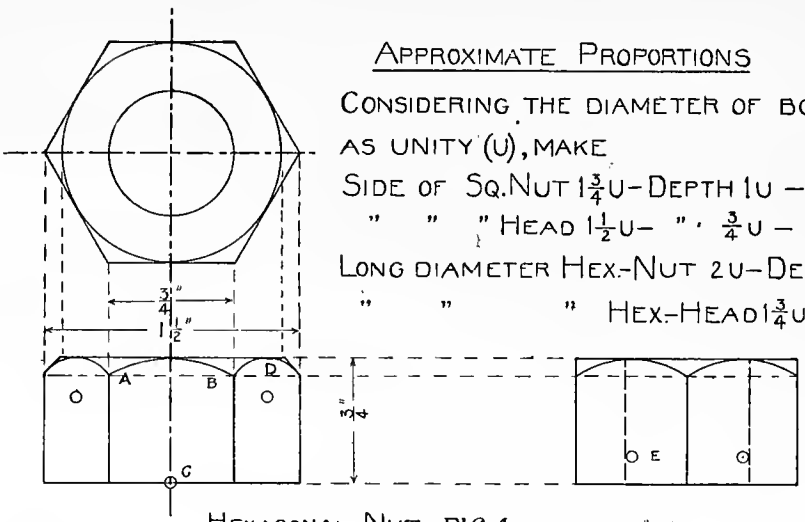

Hexagonal Nut FIG·1·

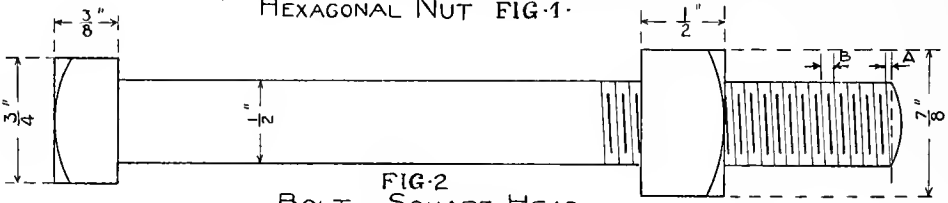

FIG·2

Bolt — Square Head

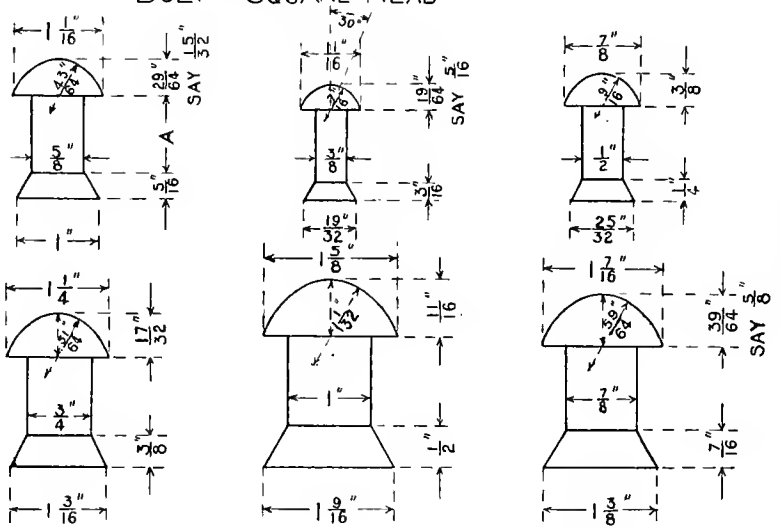

Plate 20.—This sheet represents the standard drawings, given by the American Bridge Co., of the loop rod, eye bar and clevis. Two views are given of both the loop rod and eye bar, and three of the clevis.

This plate makes an excellent exercise in drawing especially in the use of the tangents. To derive the full benefit of the problem the student should make this drawing at least one half full size.

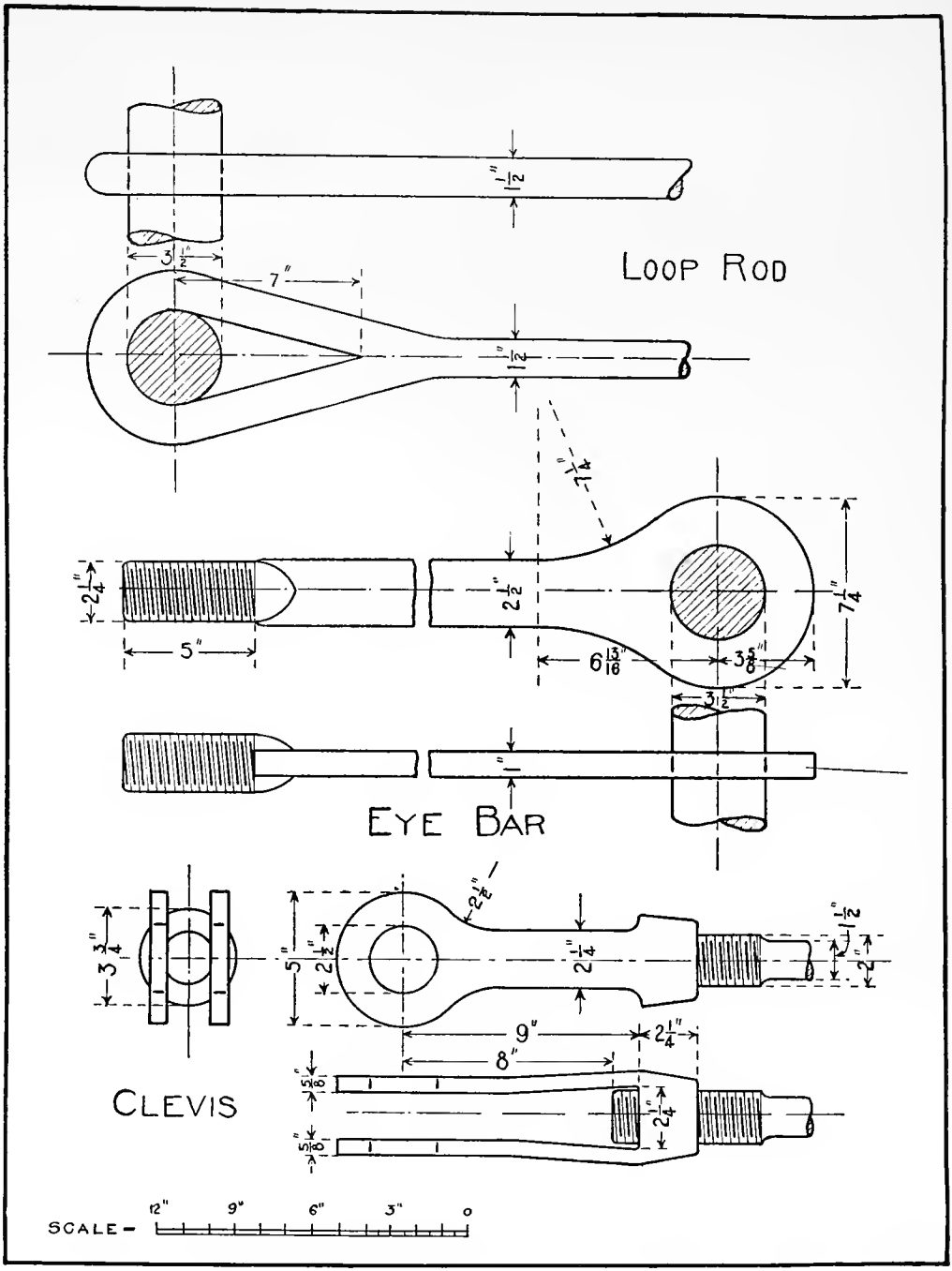
LOOP ROD
EYE BAR
CLEVIS
SCALE –
12"
9"
6"
3"
0

Plate 21.—This plate gives the working drawings of a sleeve nut and turnbuckle, according to the standard proportions given by the American Bridge Co.

The student should first consider the center lines, and after they are placed block in the main proportions; the small details will follow in order.

This affords an excellent exercise in drawing, especially in the use of the tangents.

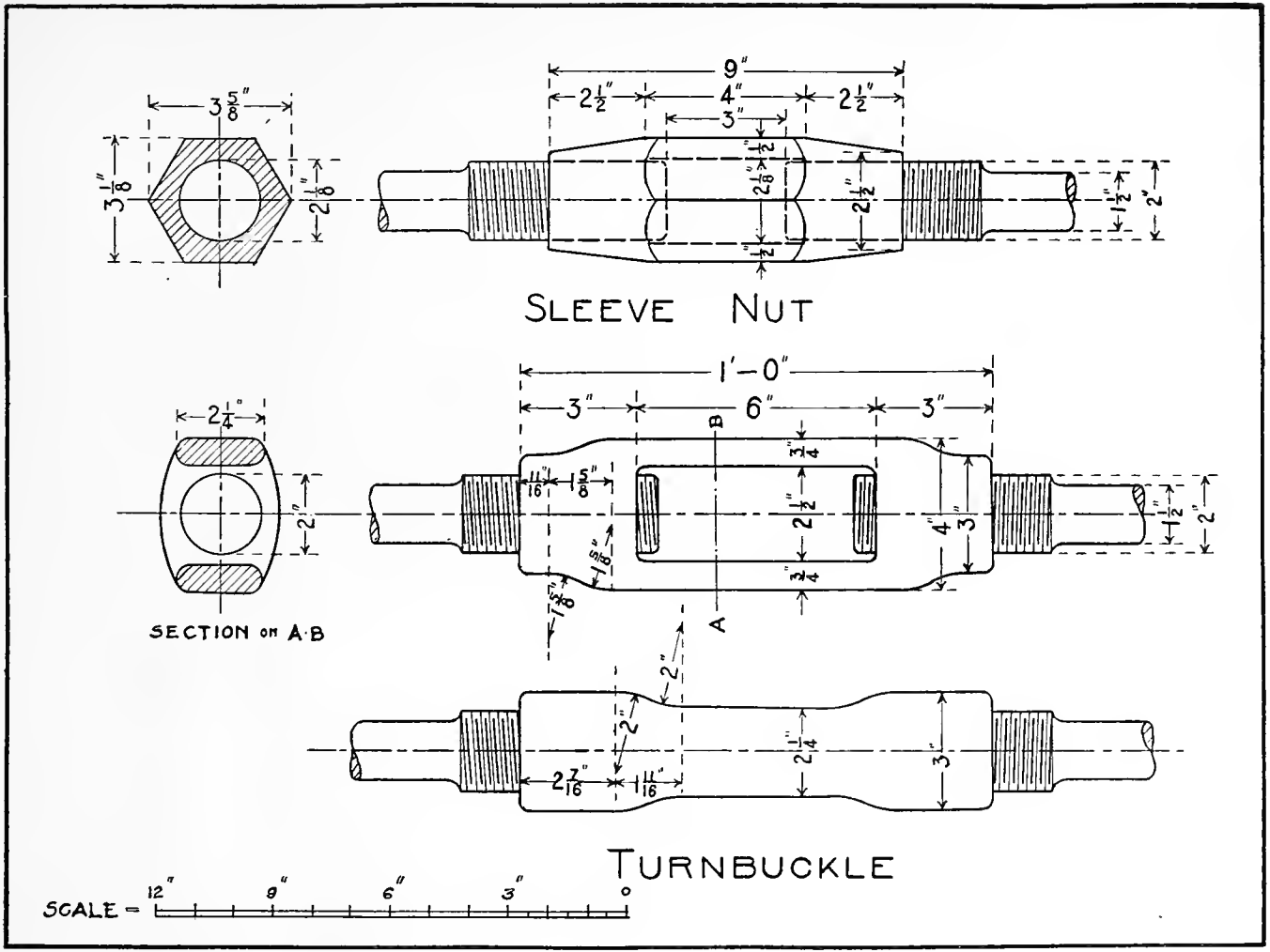
SLEEVE NUT
TURNBUCKLE
SECTION ON A·B
SCALE = 12" 9" 6" 3" 0

Plate 22.—This plate presents four typical anchors that are in general use. In each drawing the front view and horizontal section are shown, that is, the I beam is supposed to be cut horizontally just above its connection with the anchor, thus showing the details more clearly. In Fig. 1, A represents the front view of the I beam with its connections, B the top view or horizontal section. In drawing this the student should first consider the front and top views of the I beam, after which the anchor and its details may be added.

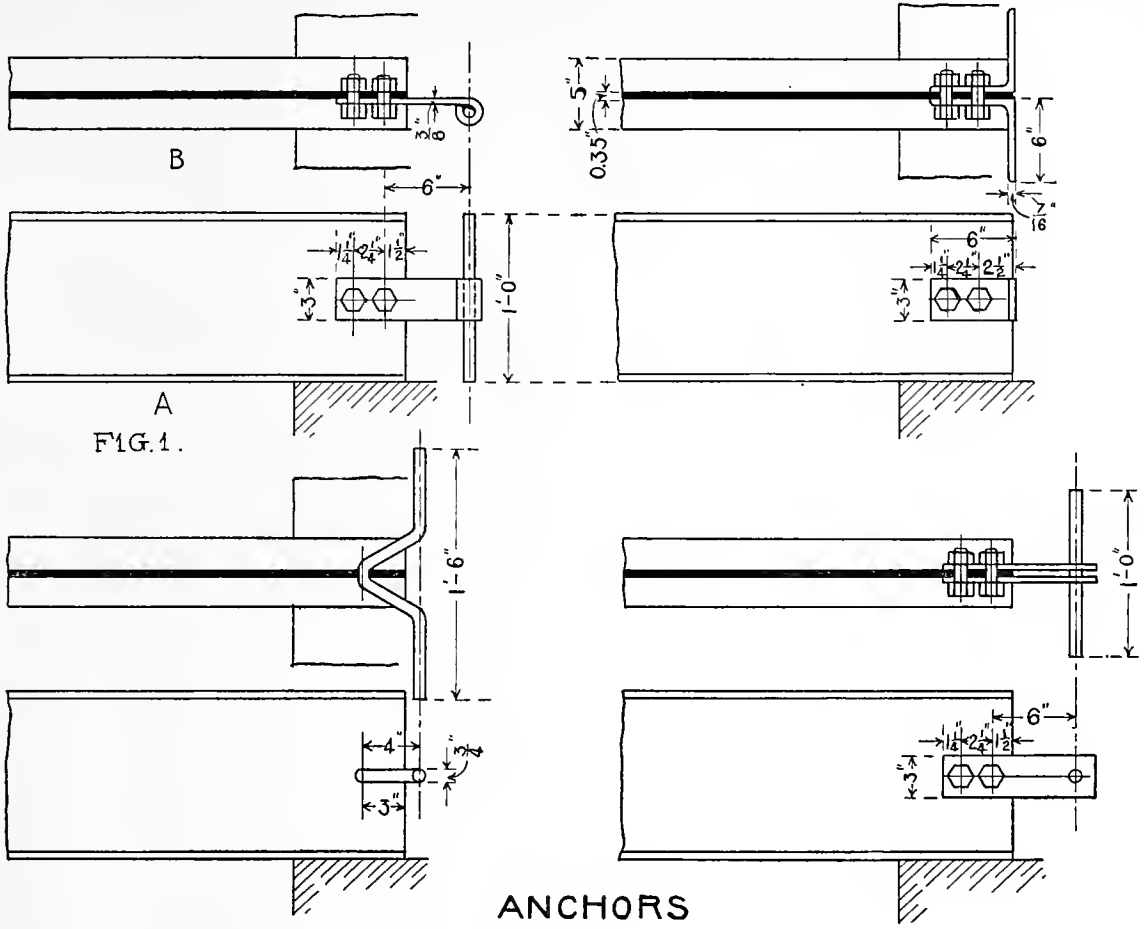

FIG. 1.

ANCHORS

Plate 23.—Fig. 1 gives the front, top and side views of two I beams connected by a cast iron separator. For a better understanding of the separator see Fig. 2, and for the details of the I beam see Fig. 4. Fig. 3 presents a type of separator used in smaller beams than that of Fig. 1. The student should make these drawings large, as nearly full size as possible.

CAST IRON SEPARATORS FOR I-BEAMS

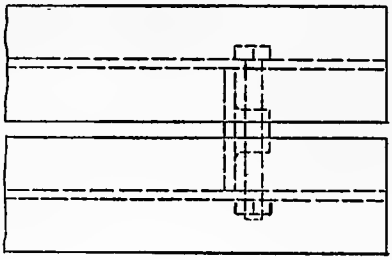

FIG. 1.

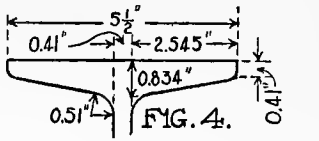

FIG. 4.

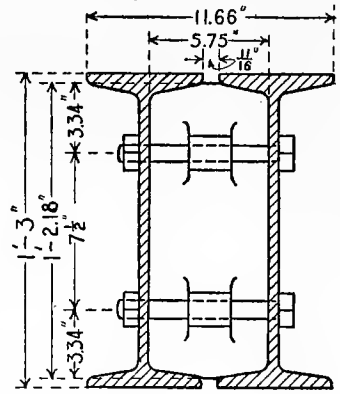

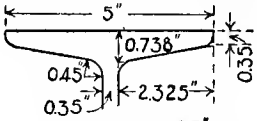

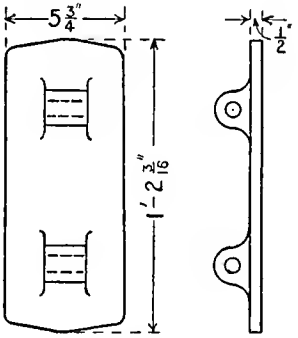

FIG. 2.

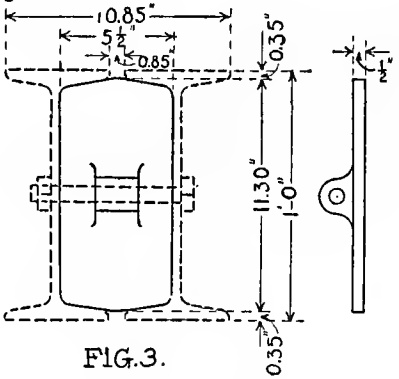

FIG. 3.

SCALE — 12" 9" 6" 3" 0

Plate 24.—This plate gives the conventional signs for rivets as designed by F. C. Osborn, C. E.

Fig. 1 represents the front and bottom views of two angles riveted to a web plate. The student will note that the four rivets at the left of the dotted line are designated as Shop; this means that the riveting is to be done at the shop; those at the right of the dotted line are designated as Field; that is, the riveting is to be done at the building. The student will also notice that the signs indicate whether the rivets are to be countersunk or not, and the side on which the countersinking is to occur.

Fig. 2 gives the method of showing whether the heads of the rivets are to be flattened or not, and how much; the amount being indicated by the diagonal lines.

OSBORN RIVET SIGNS

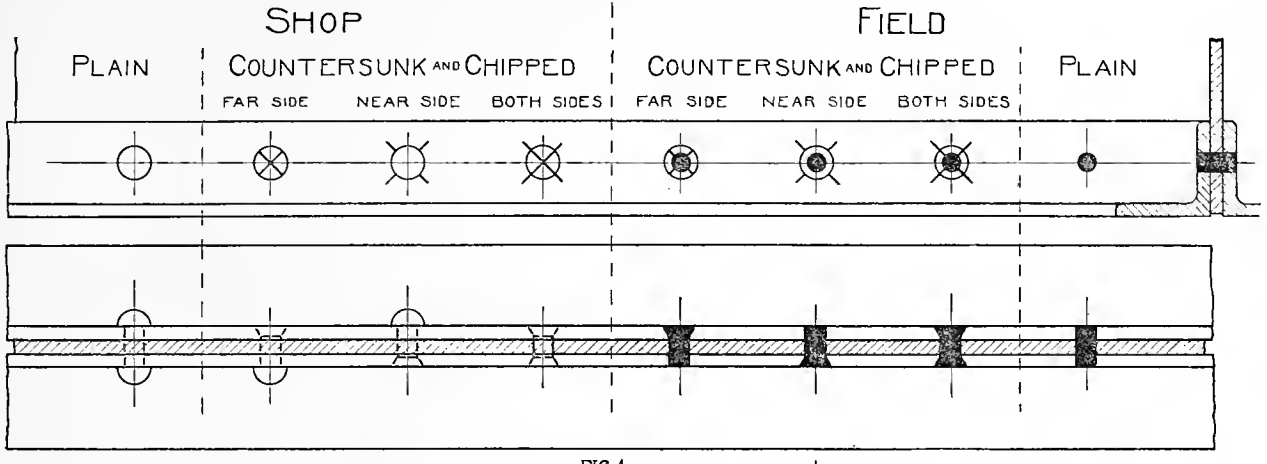

FIG·1·

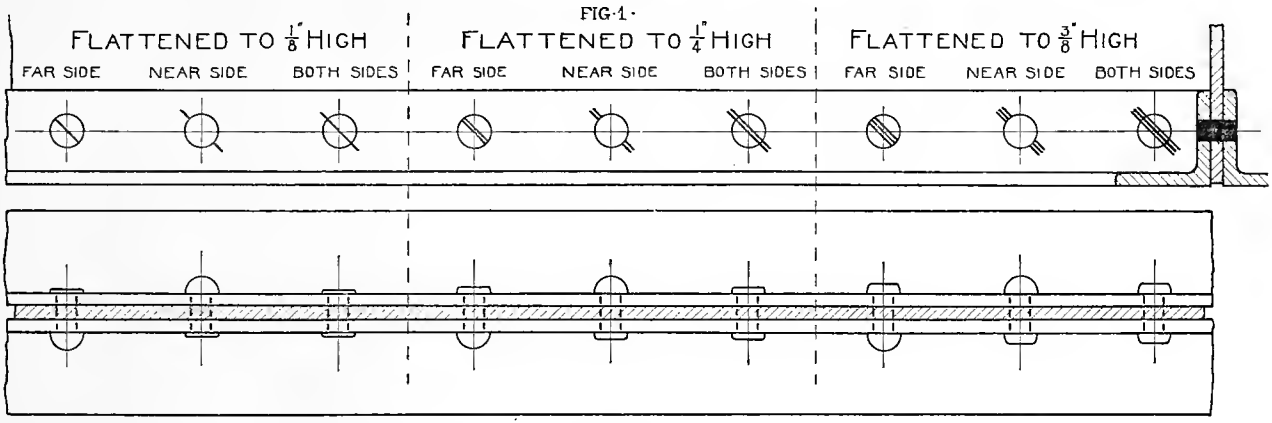

FIG·2·

Plate 25.—This plate represents the rivet signs used by the American Bridge Co. and known as the Pencoyd System. This method differs a little from the preceding, being not quite as complete.

PENCOYD RIVET SIGNS

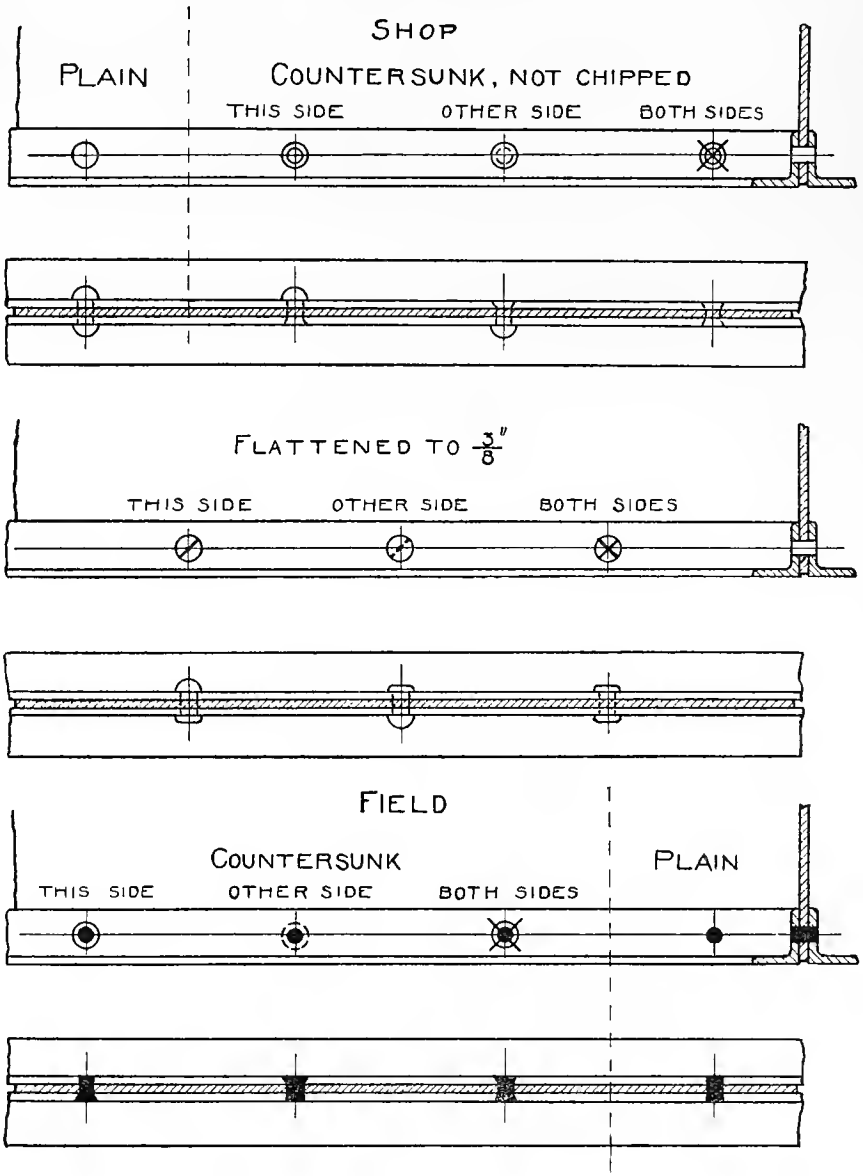

Plate 26.—Fig. 1 gives the front and top views of a single laced column. The student will note that this is made up of two channel beams held in position by plates of steel, in this instance 2″ wide by $\frac{1}{2}$″ thick.

Fig. 2 represents the drawing of a double laced column. In this, as in Fig. 1, the lacings are drawn at an angle of 45°.

Fig. 3 gives several standard sizes of lattice bars in general use.

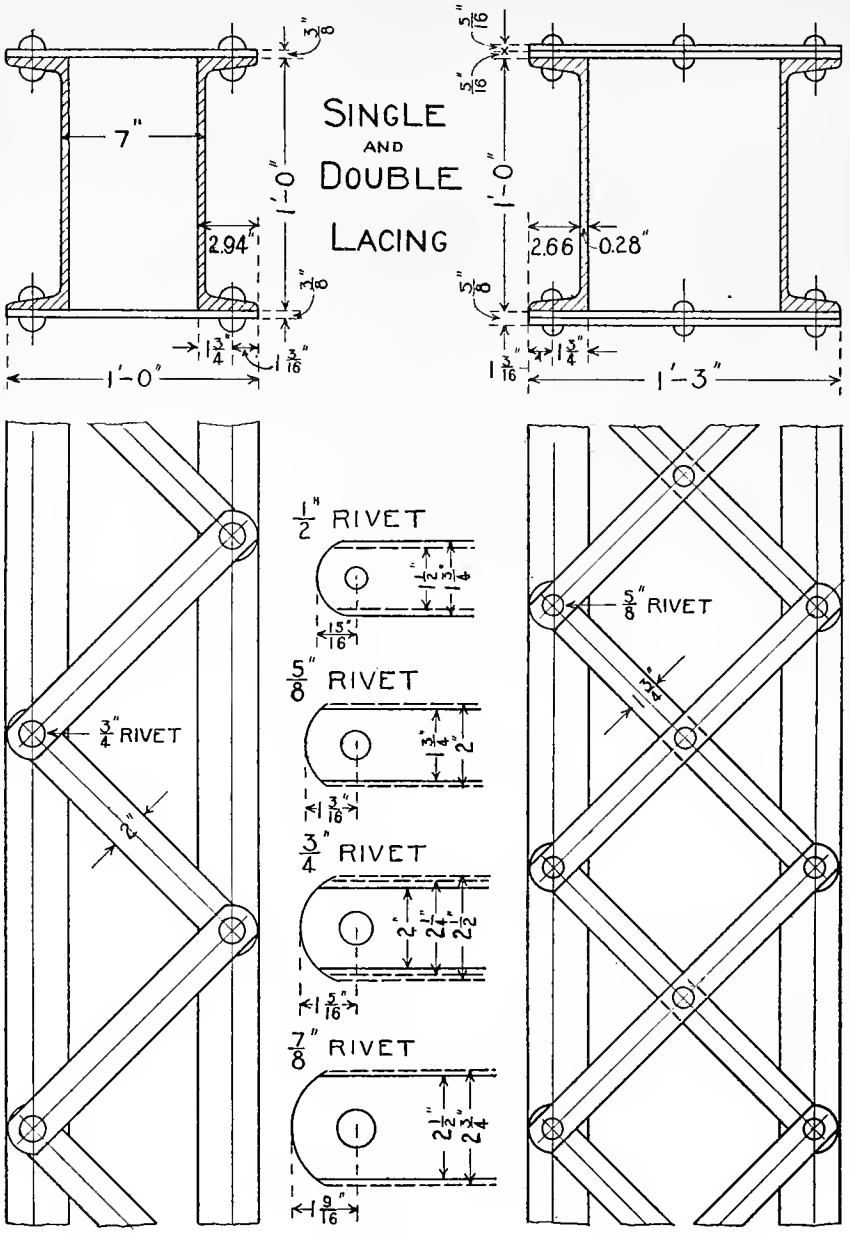

FIG 1. FIG. 3. FIG. 2.

Plate 27.—This and the following plate represent the framing angles that are in general use among the principal construction companies. The student will note that in every instance, the measurement from the center of the first row of rivets to the back of the angle is two and one half inches, and from the center of the first row to that of the second, two and one quarter inches. This regularity is designed to simplify the punchings for the rivets, so that the several holes may be punched at one operation.

STANDARD FRAMING ANGLES

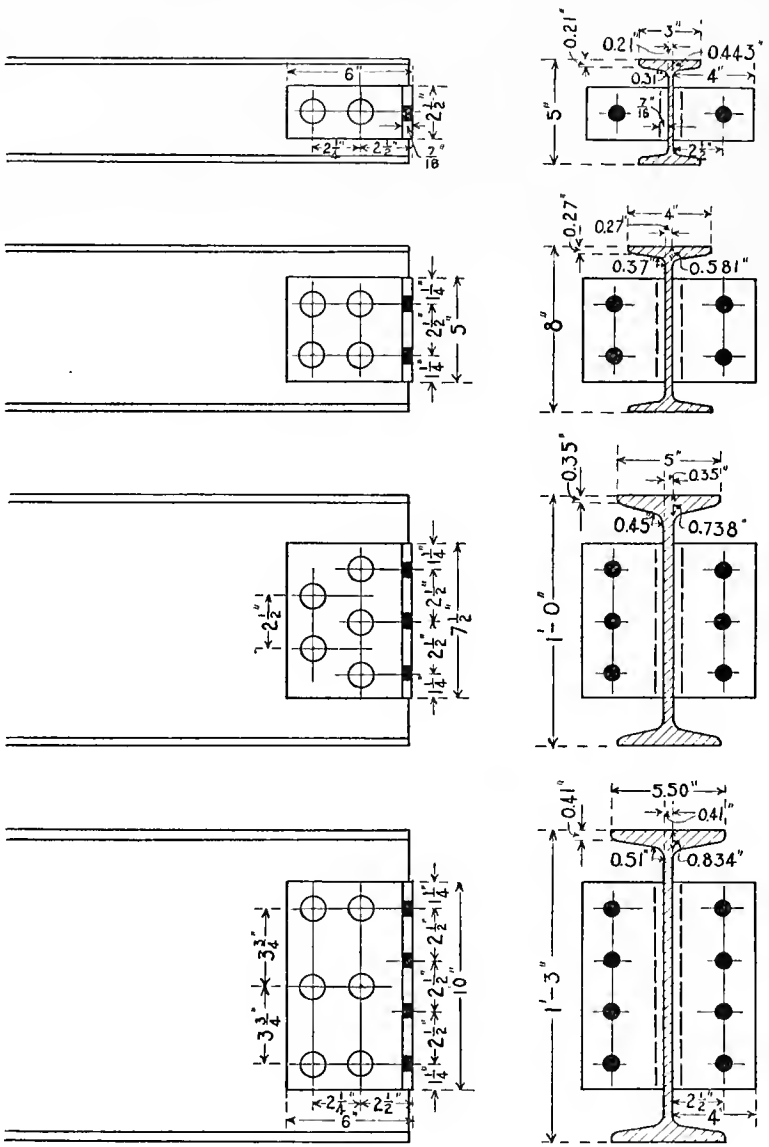

STANDARD FRAMING ANGLES

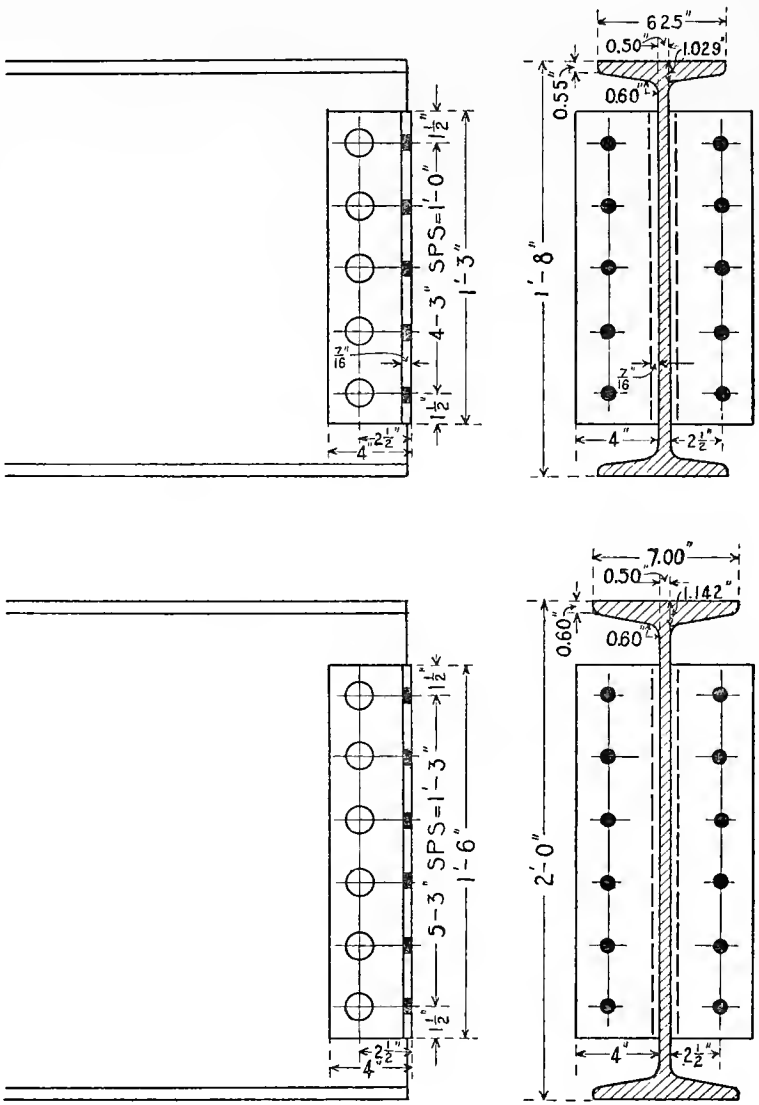

Plate 29.—This plate presents the front, top and side views of the framing of a steel floor beam into a girder. The isometric drawing in the upper right-hand section of the plate is given to show the student more clearly the relative positions of the different members, the positions of the rivets being omitted. The size of the rivets in this and all other plates to follow are to be $\frac{3}{4}''$ unless otherwise mentioned. The drawing should be made at least one half full size, and all measurements placed as indicated.

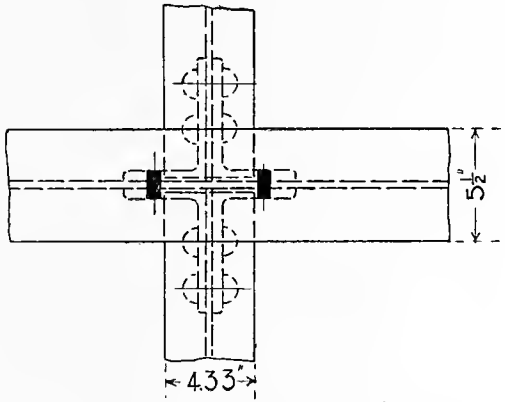

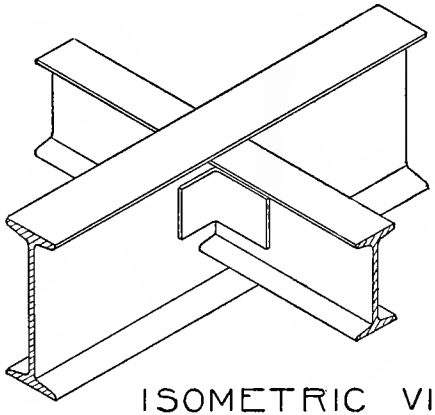

ISOMETRIC VIEW

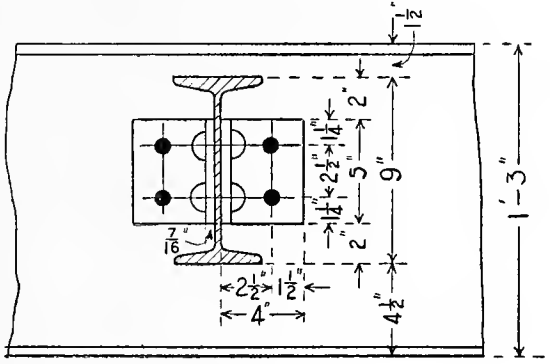

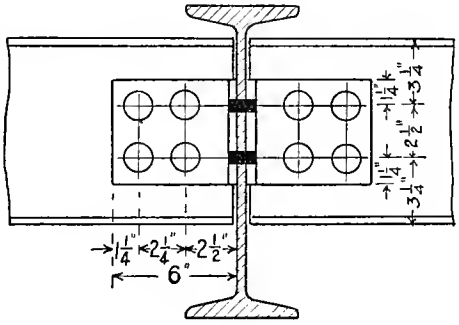

SCALE = 12" 9" 6" 3" 0

Plate 30.—This plate represents the front, top and sectional views of a plate girder.

This girder is built up with one central plate, known as the web, and reenforced by top and bottom plates and angles. The student will see that the angles used in the upper and lower members are 5″ x 6″ while the stiffeners or upright angles are 4″ x 4″. Both single and double riveting is used in this girder. The space between the rivets which is technically called "pitch," is governed by the character of the design and the load to be carried. The maximum spacing for a $\frac{3}{4}$″ rivet is 6″ and the minimum $2\frac{1}{4}$″. The distance between the center of a rivet and the outside edge of any flange should not be less than $1\frac{1}{4}$″.

The measurement directly to the right of the section is read thus: Six $3\frac{1}{2}$″ spaces are equal to 1′-9″. This applies to the spacing of rivets when several are spaced equally as in this drawing.

This problem should be drawn at least one fourth full size.

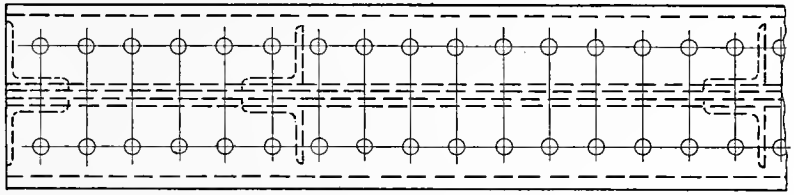

DETAIL OF

PLATE GIRDER

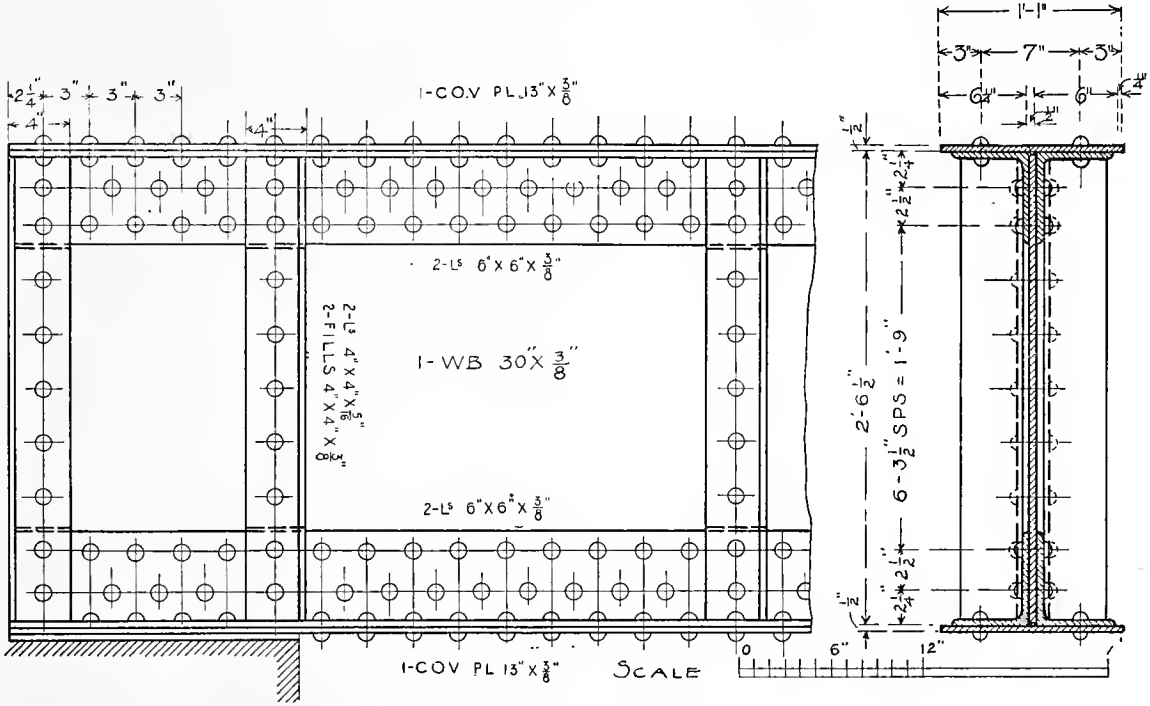

Plate 31.—This drawing represents the front, top and sectional views of a box girder. The general instructions given in the foregoing plate may apply to this drawing.

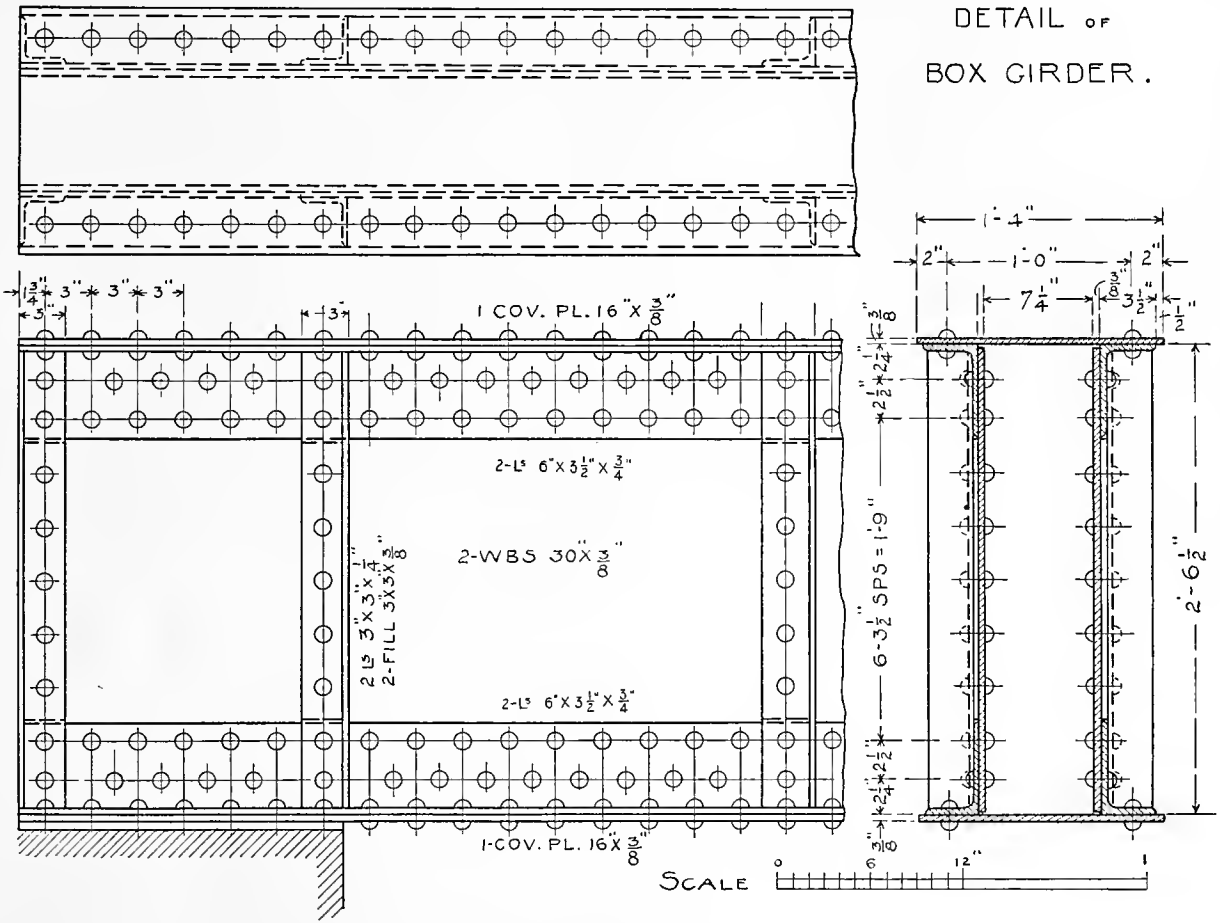
DETAIL OF
BOX GIRDER.
1 COV. PL. 16 "X 13/16"
2-L⁵ 6"X 3½"X ¾"
2-WBS 30X 13/16"
2 L⁵ 3"X 3"X ¼"
2-FILL 3"X 3"X 5/16"
2-L⁵ 6"X 3½"X ¾"
1-COV. PL. 16"X 13/16"
1'-4"
2"
1'-0"
2"
7¼"
6-3½" SPS = 1'-9"
2'-6½"
SCALE
0
6"
12"
1'

Plate 32.—This drawing presents the front, top and side views of a base together with the connection of a "closed column." The base is made of cast iron, the top surface being faced or planed off at the mill, giving an even bearing surface for the column.

The small circle at A represents a hole in the casting, about $1\frac{1}{2}''$ in diameter. These holes are arranged so the mason can pour in grout (thin mortar), after the base is properly set. By this method the mason is able to fill any openings that may have been left unfilled.

This type of base is quite generally used; but in practice, special designs and dimensions must be considered to meet the requirements of the particular problem.

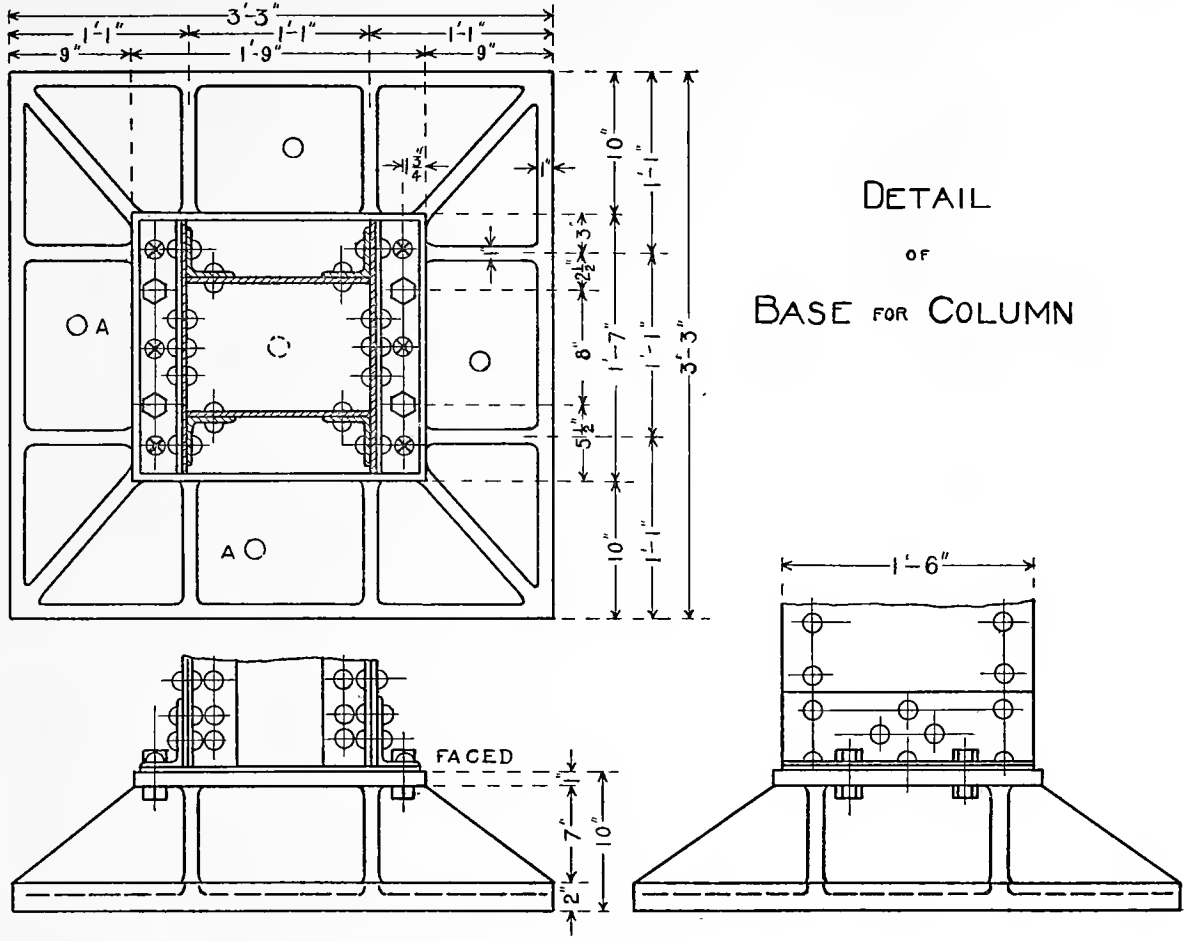

DETAIL

OF

BASE FOR COLUMN

Plate 33.—This drawing gives the front, top and side views of a "closed column," built up of plates and angles. It is an enlarged detail of the preceding plate, taking in the portion of the column above the face line. Detail A gives the measurements necessary to make the drawing of the upright angle, while section B gives the measurements for the horizontal angle.

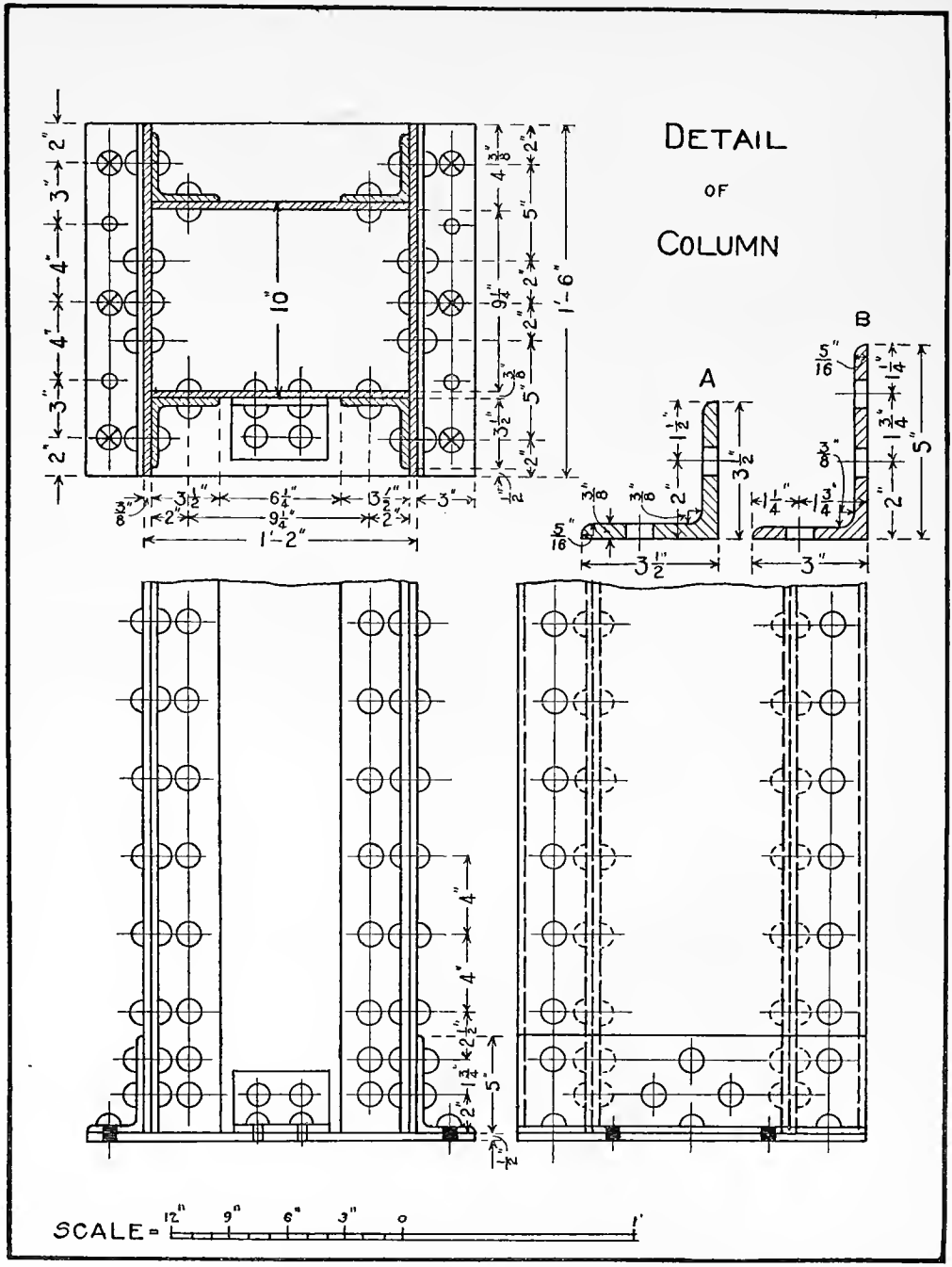
DETAIL
OF
COLUMN
A
B
10"
1'-2"
1'-6"
SCALE = 12" 9" 6" 3" 0 1'

Plate 34.—This drawing presents an "open section column," built up with an I beam and two channels. Detail A gives a portion of the necessary measurements in making the drawing. The student should draw this to a large scale in order to get the full benefit of the problem.

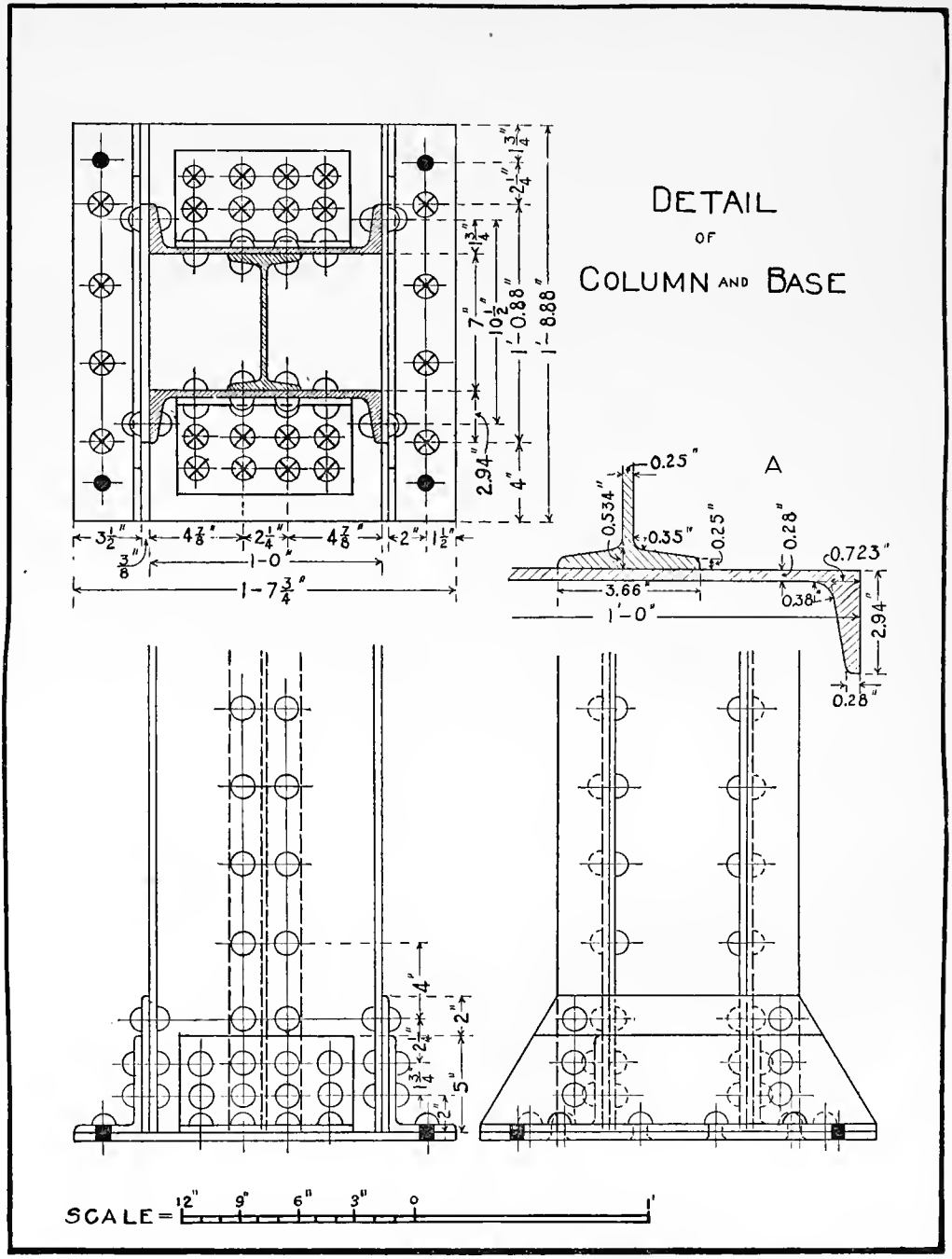
DETAIL
OF
COLUMN AND BASE
A
SCALE = 12" 9" 6" 3" 0 1'

Plate 35.—This plate presents a "closed column," built up of four Z-bars and three plates. Two angles are used at the base to stiffen and create a proper connection between the base and the column. Fig. 1 gives an enlarged detail of a portion of one of the Z-bars. This is given to assist the student with the minor details.

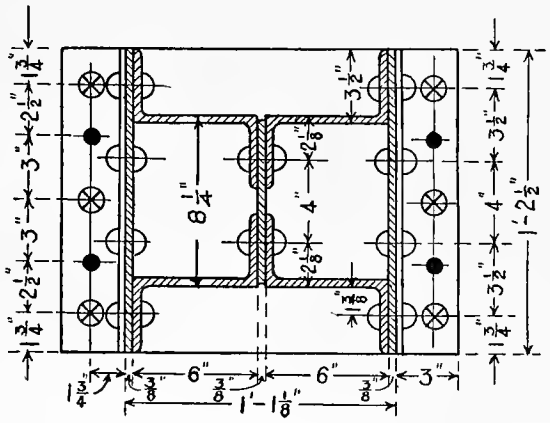

DETAIL OF Z-BAR COLUMN

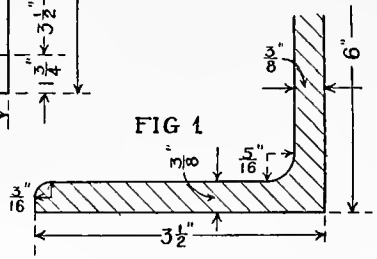

FIG 1

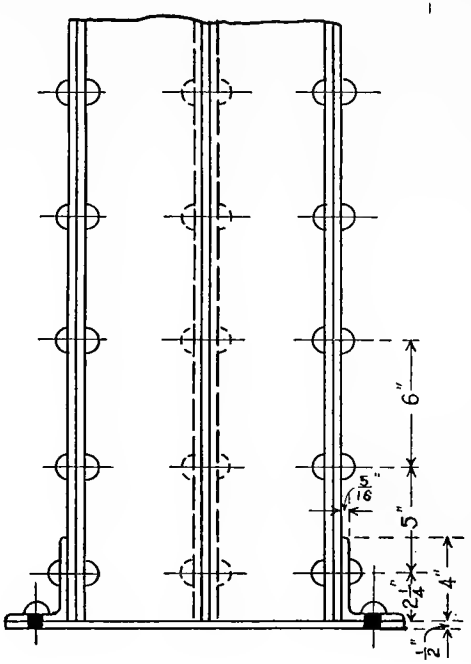

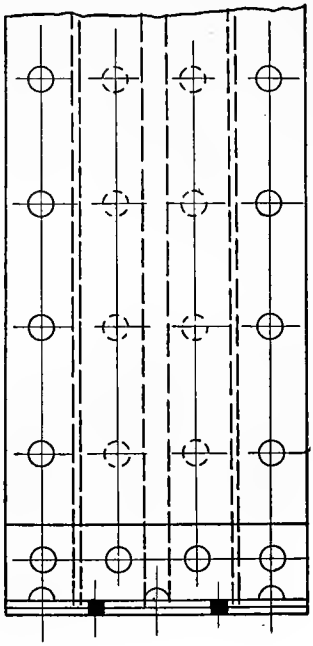

SCALE = 12" 9" 6" 3" 0 1'

Plate 36.—This plate gives the front, top and side views of the connection between an I-beam and a Z-bar column. This is one of the simplest connections in use, the supporting member being simply an angle iron. The student will note that the solid black openings as at A indicate "field riveting," that is, the riveting is to be done as the building is being erected.

Fig. 1 presents an enlarged detail of one of the Z-bars while Fig. 2 gives the detail of an I-beam.

CONNECTION OF I-BEAM TO Z-BAR COLUMN

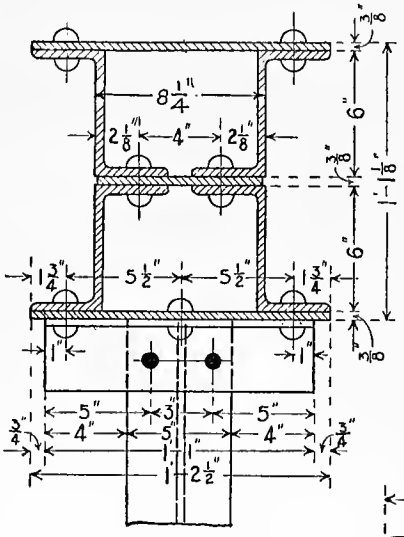

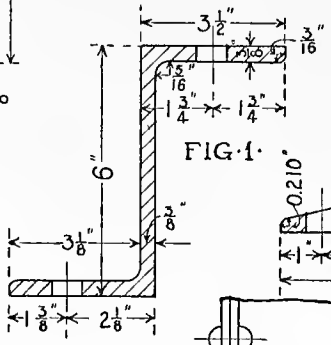

FIG·1·

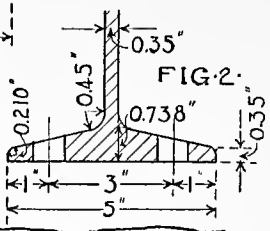

FIG·2·

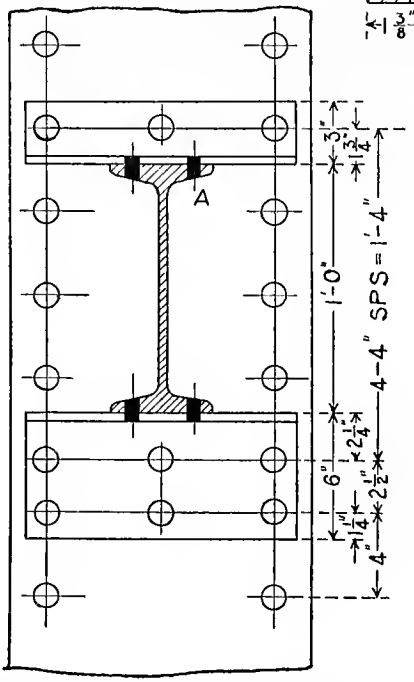

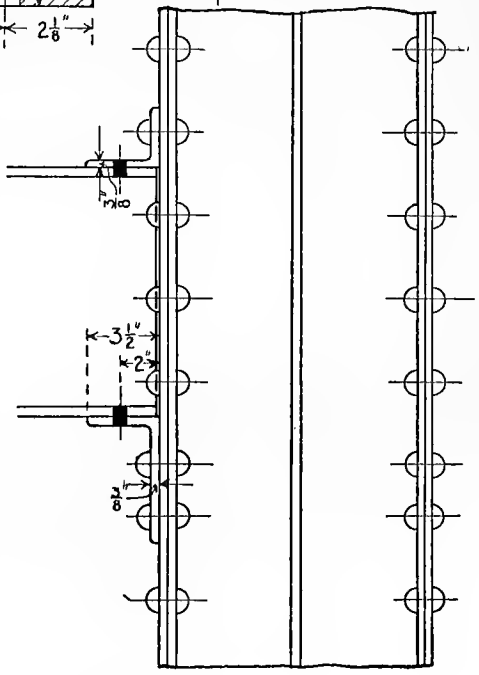

SCALE = 12" 9" 6" 3" 0 1'

Plate 37.—This plate presents the front, top and side views of a Z-bar column, showing the connections with I-beams. The I-beams are connected to the column by means of two horizontal angles, the lower one being reenforced or supported by means of two vertical angles. The student should note that the leg of the angle in each case comes directly under the web of the I-beam.

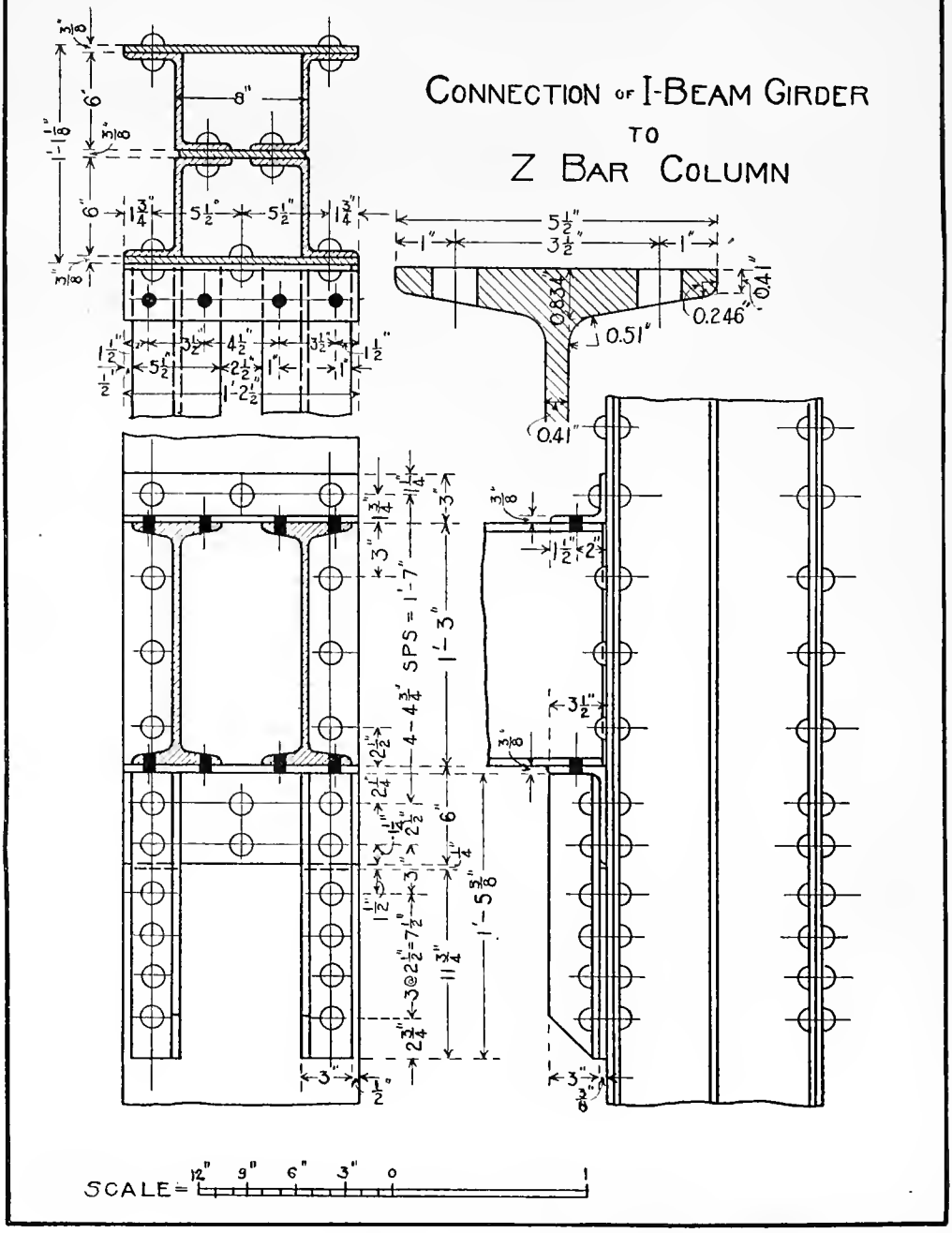
CONNECTION OF I-BEAM GIRDER
TO
Z BAR COLUMN
8"
5½"
3½"
1"
0.834"
0.51"
0.246"
0.41"
4 - 4½" SPS = 1'-7"
1'-3"
1'-5⅝"
SCALE = 12" 9" 6" 3" 0 1

Plate 38.—This plate gives the front, top and side views of a channel column with its various I-beam connections. In many respects the connections in this are similar to the last plate.

Just above the I-beam connections a method of splicing the column is shown which usually occurs every second story. Fig. 1 gives the detail of the channel, Fig. 2 the detail of the 12″ I-beam, and Fig. 3 the detail of the 8″ I-beam.

DETAIL OF COLUMN

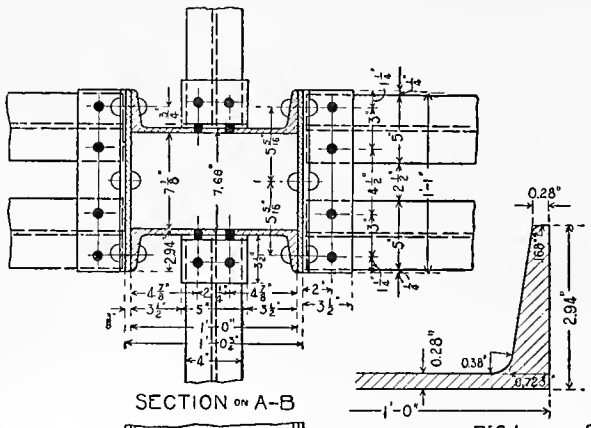

FIG.1.

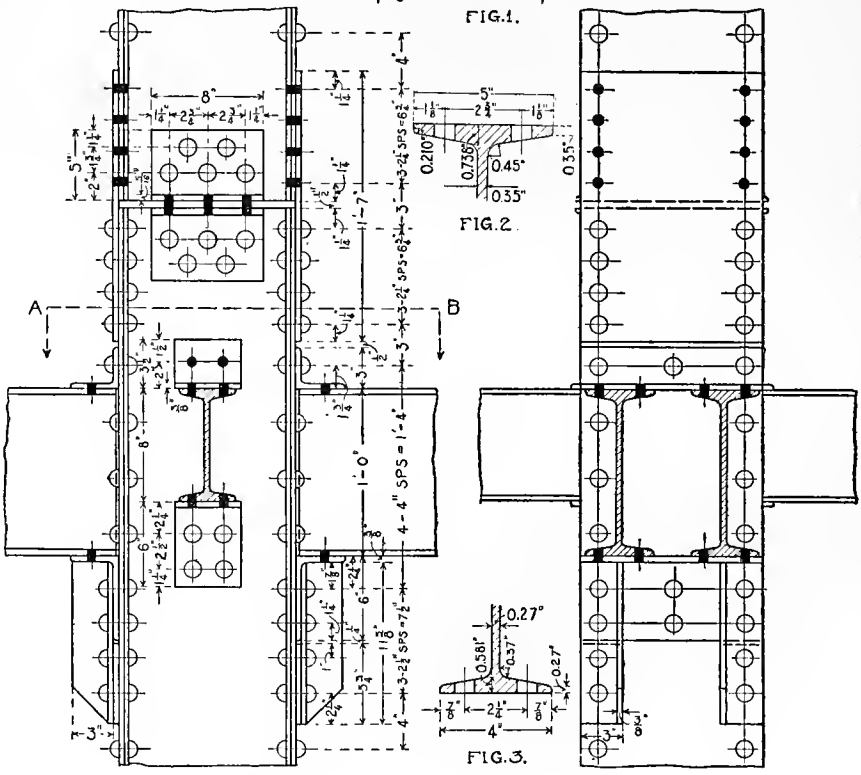

FIG.2.

FIG.3.

SCALE = 12" 9" 6" 3" 0 1'

Plate 39.—This plate gives a typical form of the Phœnix segmental column. The column is seldom used on account of expense, but makes an excellent exercise in drawing.

DETAILS
OF
PHOENIX SEGMENTAL COLUMNS

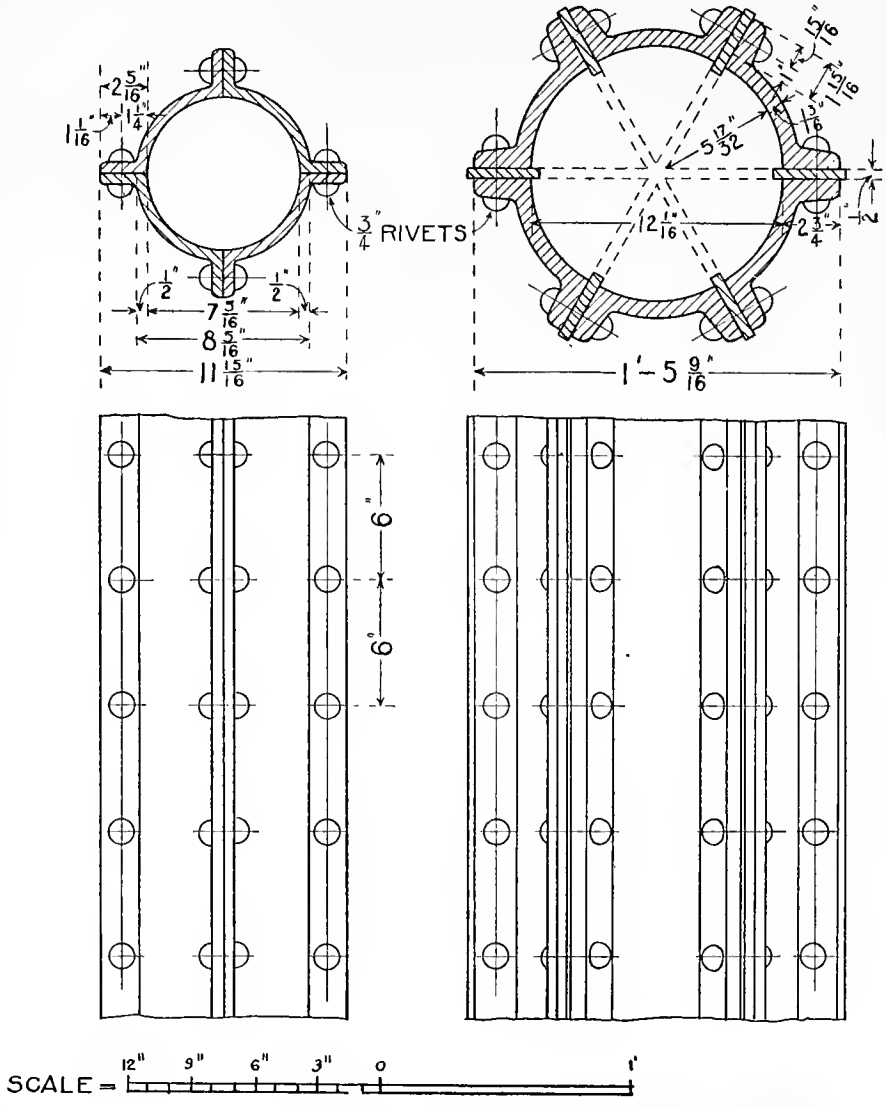

DETAIL OF GRILLAGE

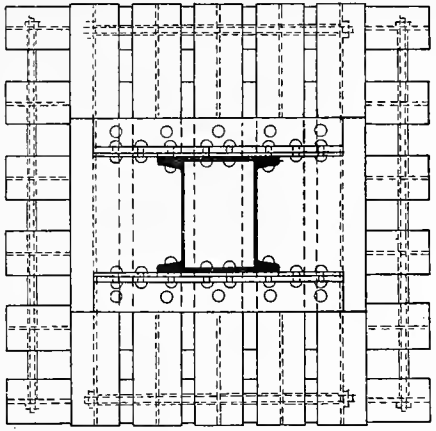

Top View.

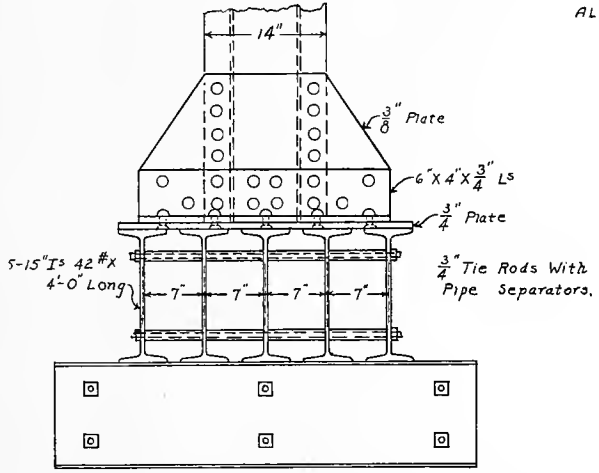

Front View.

ALL RIVETS 3/4"-DIAMETER.

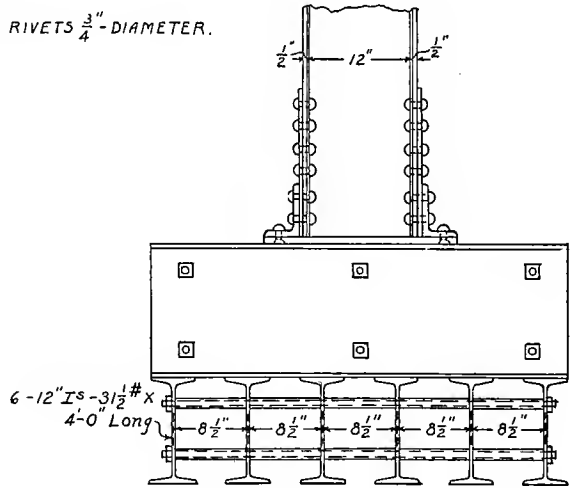

Side View.

Plate 41.—This drawing gives three views of a typical cast-iron column with its connections.

The student will note that the top of the lug or seat, has a slight pitch. This is done to prevent the weight from bearing on the outside edge of the seat should any deflection of the beam take place.

CONNECTIONS TO CAST IRON COLUMNS

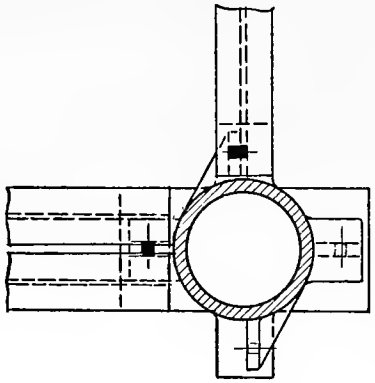

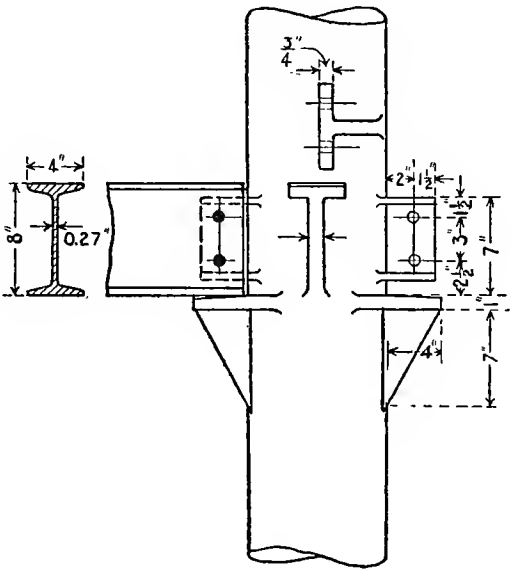

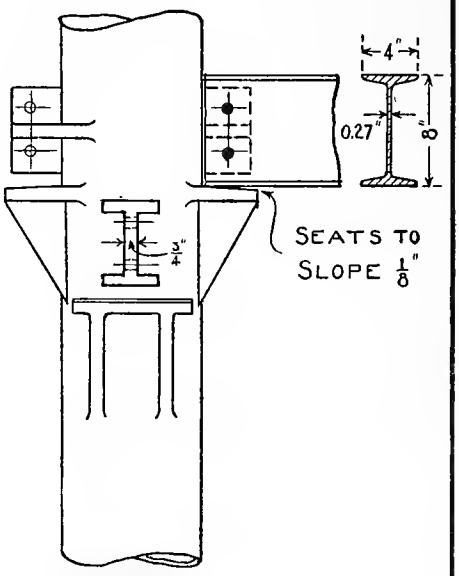

SCALE = 12" 9" 6" 3" 0 1'

Plate 42.—This plate shows three views of a typical cast-iron column and its connections. The connection at A is arranged for a double I-beam girder, while that at B is for a single I-beam.

The connection used to join the double I-beams with the column serves as a separator as well as a connection.

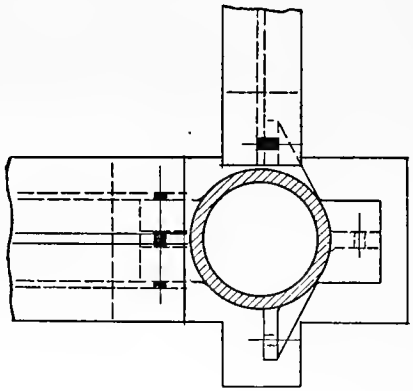

CONNECTIONS TO CAST IRON COLUMNS

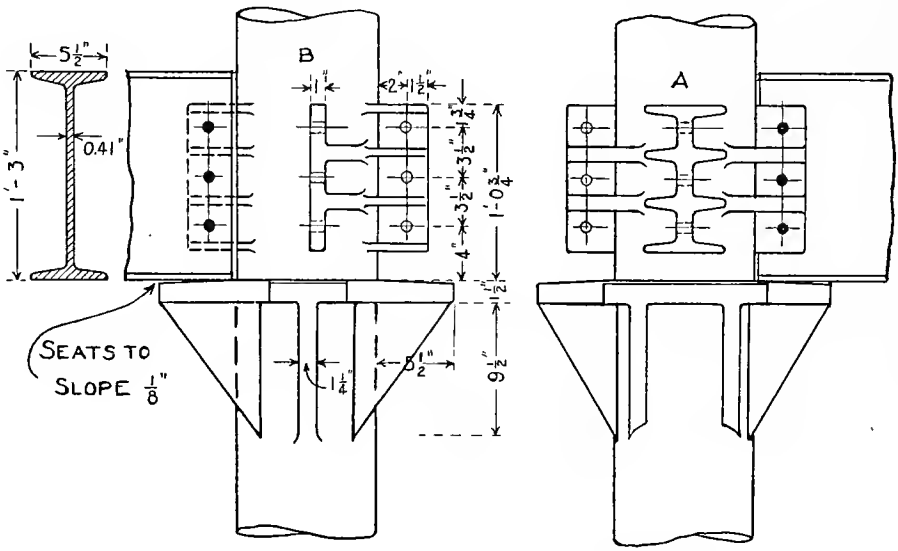

SCALE = 12" 9" 6" 3" 0 1'

Plate 43.—This drawing gives the front, top and side views of a square cast-iron column with its several connections.

The method of joining the beams is shown just above the section A-B. These connections occur at each floor, differing from steel columns, which usually run through two floors.

The student should note that the I-beams are connected to the column by means of angles, unlike the last two plates in which cast-iron lugs were used.

The isometric drawing in the upper right-hand section of the plate is given to assist the student in reading and making the drawing. The rivets and bolts are omitted in this part of the plate.

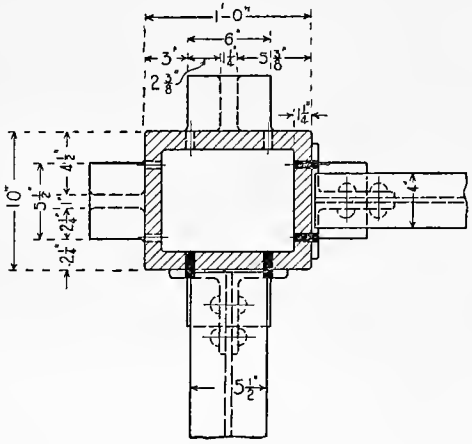

SECTION ON A-B

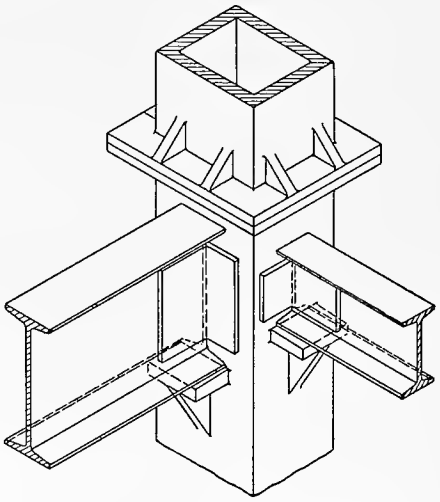

ISOMETRIC DRAWING

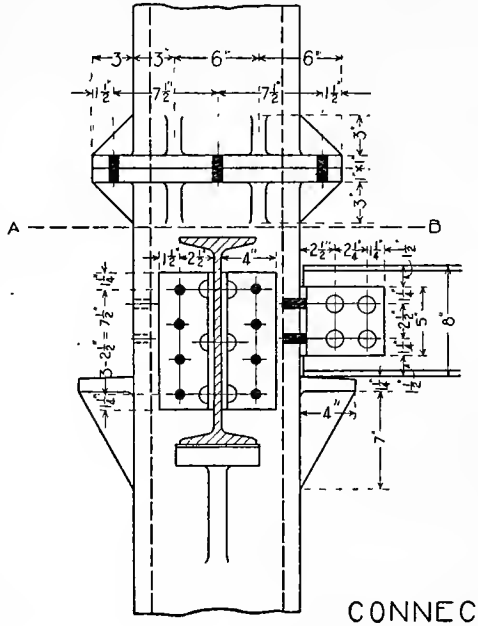

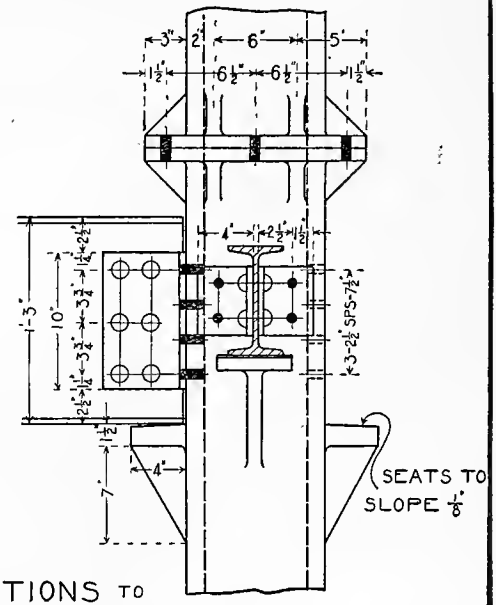

CONNECTIONS TO

SQUARE CAST IRON COLUMN

SCALE — 12" 9" 6" 3" 0

Plate 44.—The drawing in the upper section of the plate gives the conventional method of representing a typical beam-plan. The student will note that the main girders are represented by a single line, as at G; while the floor beams by a line running in the opposite direction. The dot-and-dash line indicates the position of the tie-rods.

The drawing occupying the lower portion of the plate represents an enlarged detail of one of the floor panels, showing the manner in which the beams and girders are framed together.

For a more comprehensive presentation, study the two following plates.

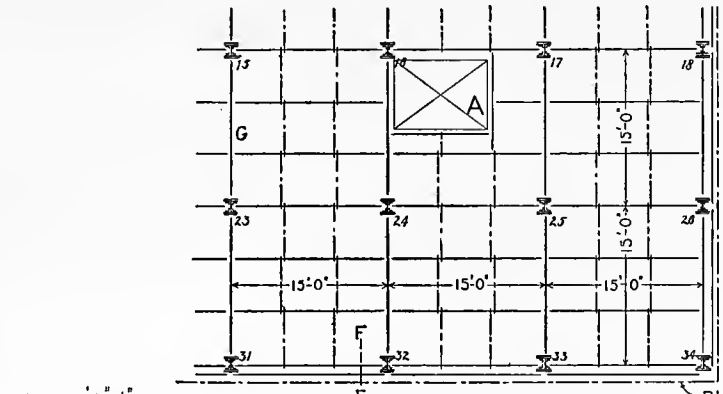

SECTION OF TYPICAL BEAM-PLAN

1-WEB 1'-0" x ½"
4-L's 6"x4"x ½"
4-PLATES 1'-4" x ½"

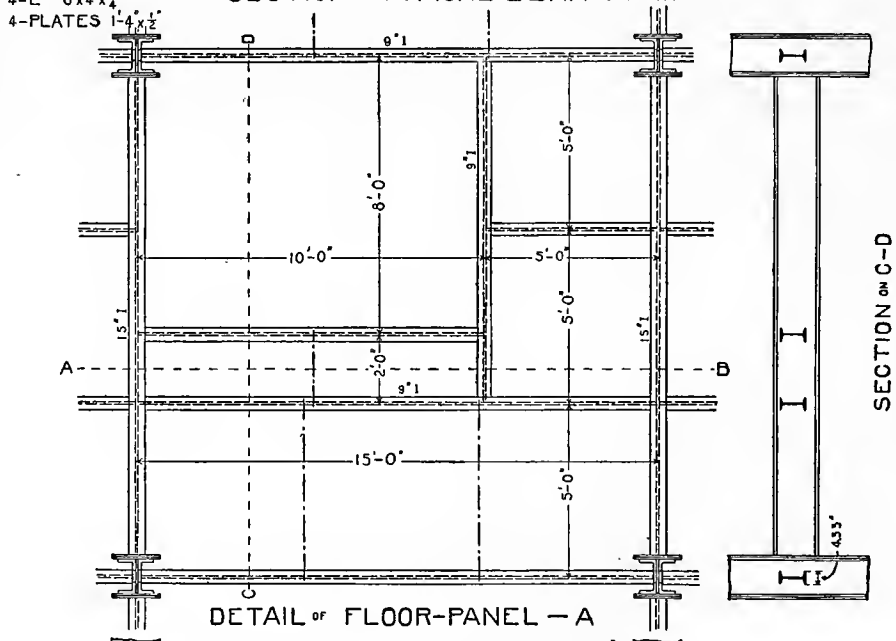

DETAIL OF FLOOR-PANEL — A

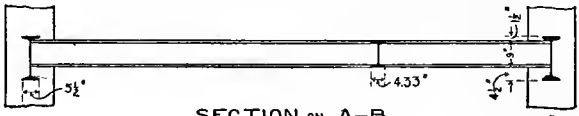

SECTION ON A-B

SCALE- 12" 6 3 0 1' 2' 3' 4'

Plate 45.—Gives a working drawing of terra-cotta floor construction, end method, such as may be used with the beam-plan of the foregoing plate.

DETAIL OF FLOOR CONSTRUCTION

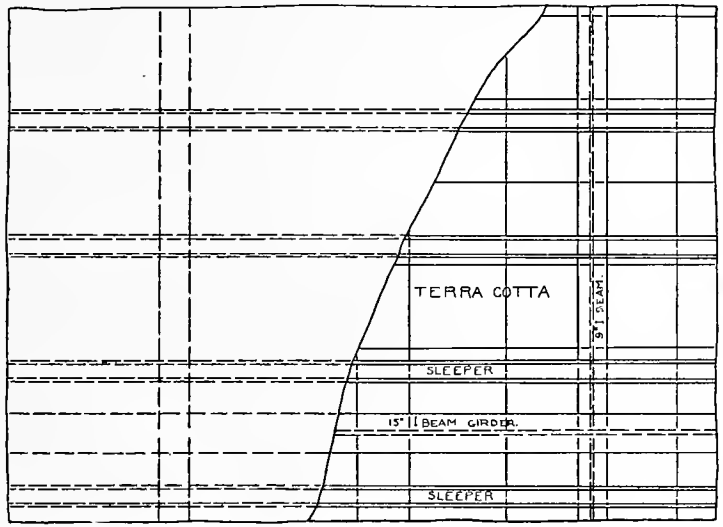

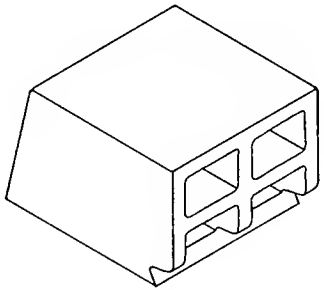

ISOMETRIC VIEW
OF
TERRA COTTA BLOCK

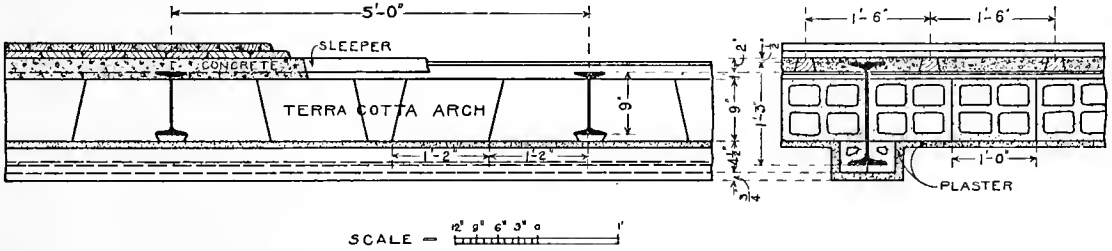

SCALE — 12" 9" 6" 3" 0 1'

Plate 46.—This drawing gives the front, top and right side views of the plate and angle column used in Plate 44. In making the drawing the student will do well to locate the main lines of the column and girder in all three views before considering the minor details.

Fig. 1 gives the detail of the angle used in building up the column. Fig. 2 gives the detail of the 15″ I-beam girder. Fig. 3 gives the detail of the 9″ I-beam. Fig. 4 gives an isometric view showing the relative positions of the several members. Make the drawing to as large a scale as possible.

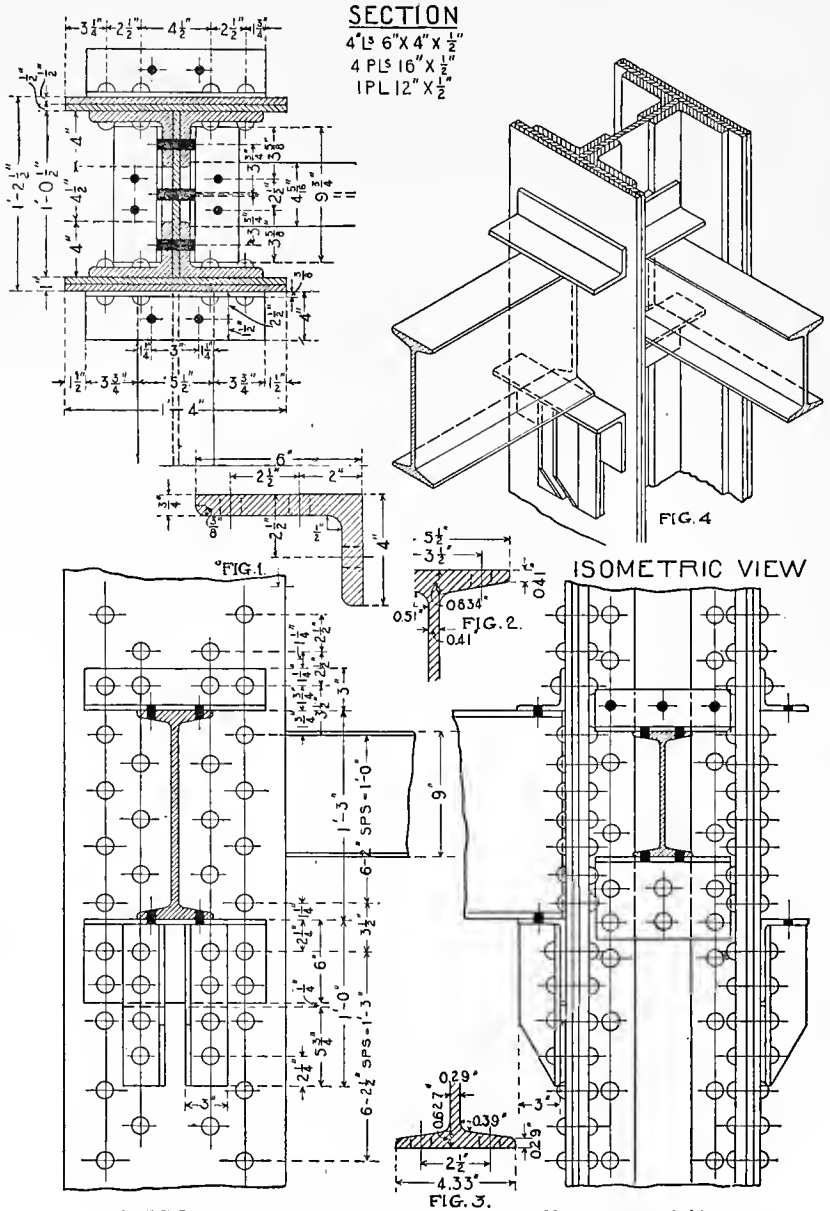
SECTION
4 L's 6" X 4" X ½"
4 PL's 16" X ½"
1 PL 12" X ½"
FIG. 4
ISOMETRIC VIEW
FIG. 1.
FIG. 2.
FIG. 3.
DETAIL OF PLATE AND ANGLE COLUMN
SCALE =

Plate 47.—This plate represents the working drawings of column, No. 32, Plate 44, showing the connections between the spandrel beams and the column. These beams are located at the floor level and carry the wall above as well as their portion of the floor.

Figs. 1, 2 and 3 represent the front, top and side views of the spandrel girder as shown at section E. F., Plate 44.

The student should first lay out the three views of the column and the main 15″ girder, after which proceed to the details.

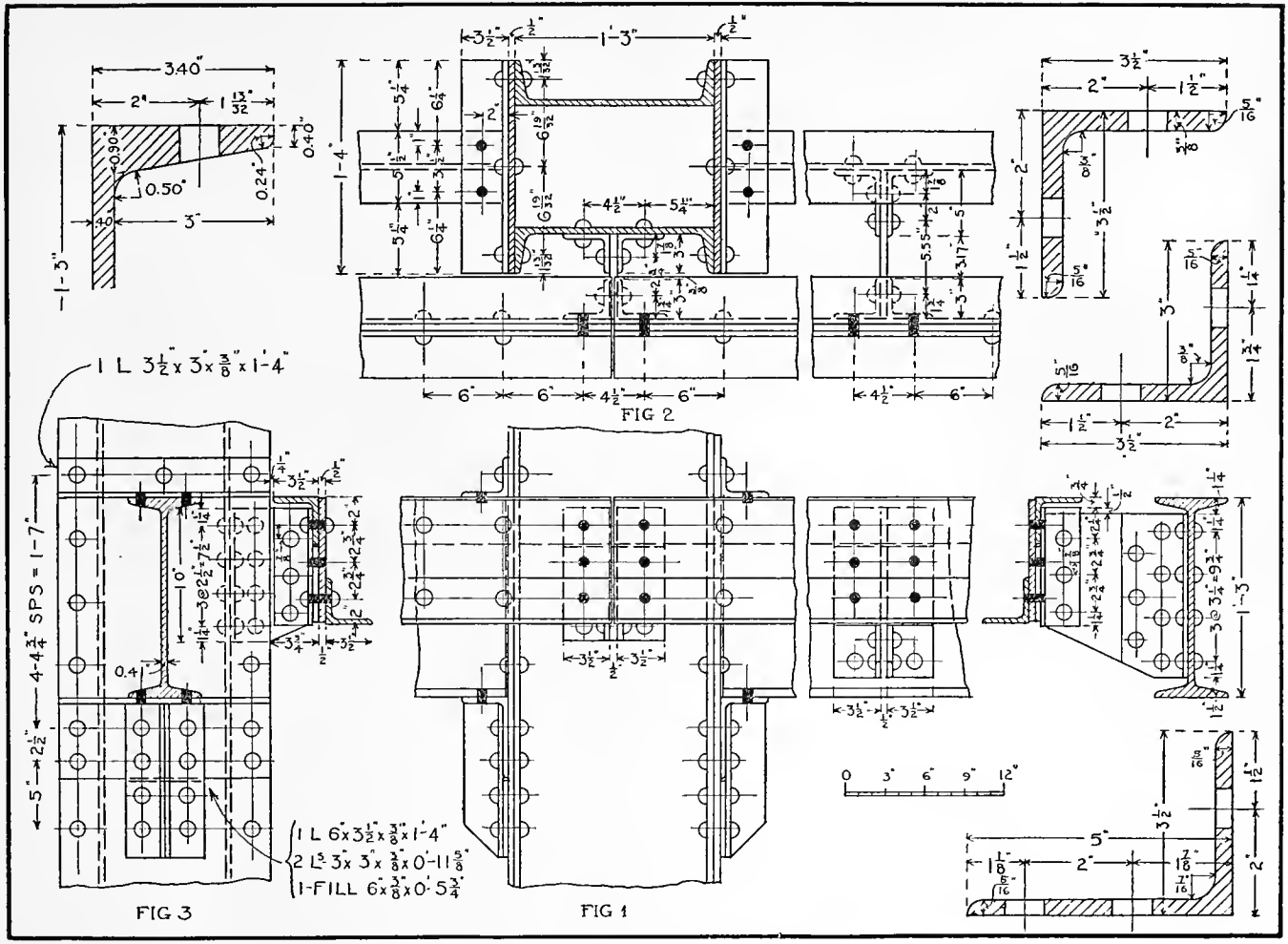
1 L 3½" x 3" x ⅜" x 1'-4"
4-4¾" SPS = 1'-7"
1 L 6" x 3½" x ⅜" x 1'-4"
2 L 3" x 3" x ⅜" x 0'-11⅝"
1-FILL 6" x ⅜" x 0'-5¾"
FIG 3
FIG 2
FIG 1
0 3" 6" 9" 12"

DETAIL OF COLUMN AND SPANDREL CONNECTION.

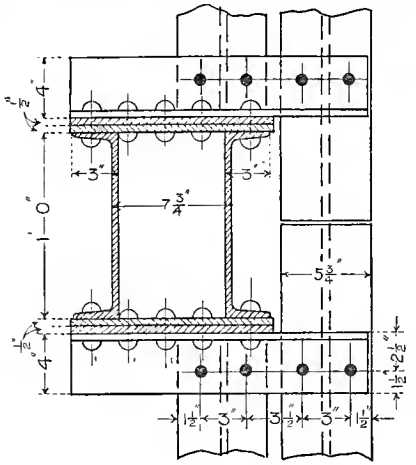

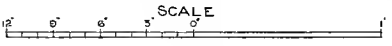

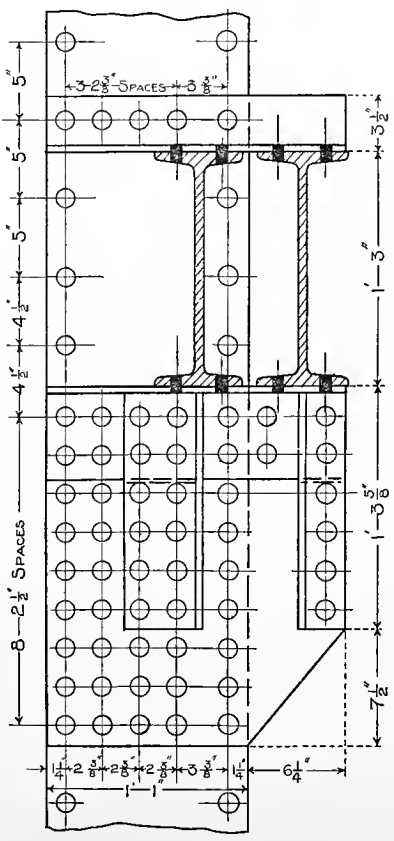

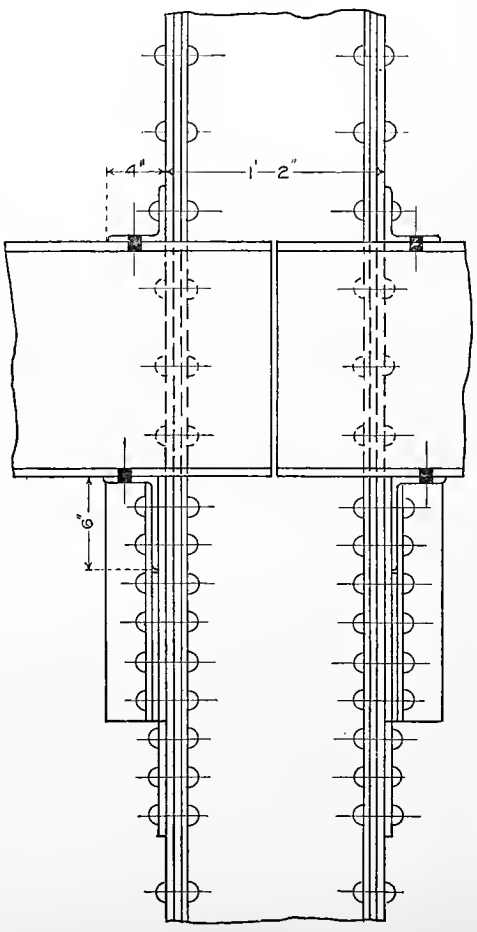

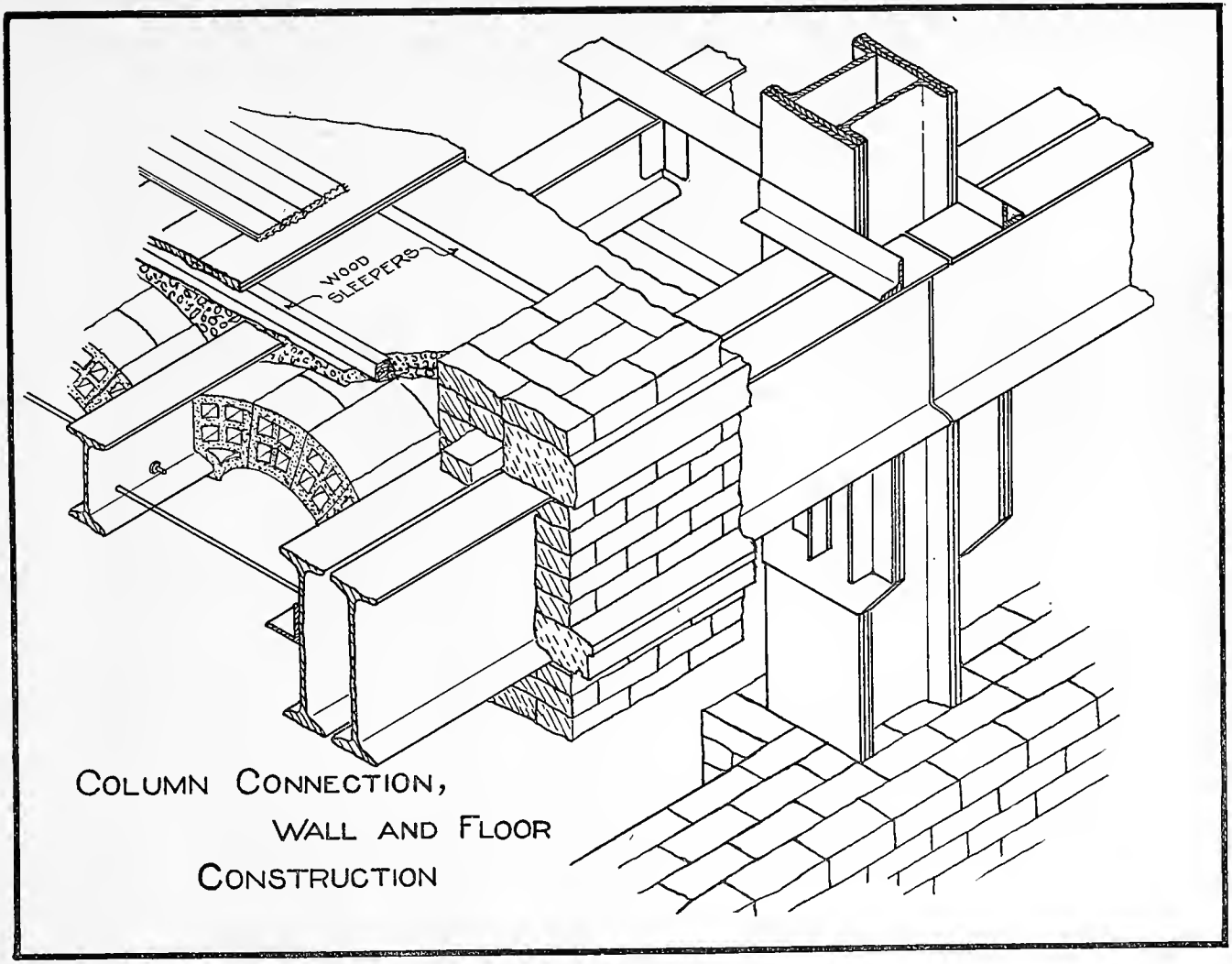

COLUMN CONNECTION,
WALL AND FLOOR
CONSTRUCTION

CHAPTER V.

STEEL MILL CONSTRUCTION.

Plate 50.—This plate gives the elevation and two sectional views of a typical mill construction. The corrugated iron in the elevation is largely omitted to show the student the method of framing. In drawing this, it will be well to make the sections first and project directly from these to the elevation. The drawing should be made large; and for a more definite idea of the construction the student will do well to consult the four plates of details that follow.

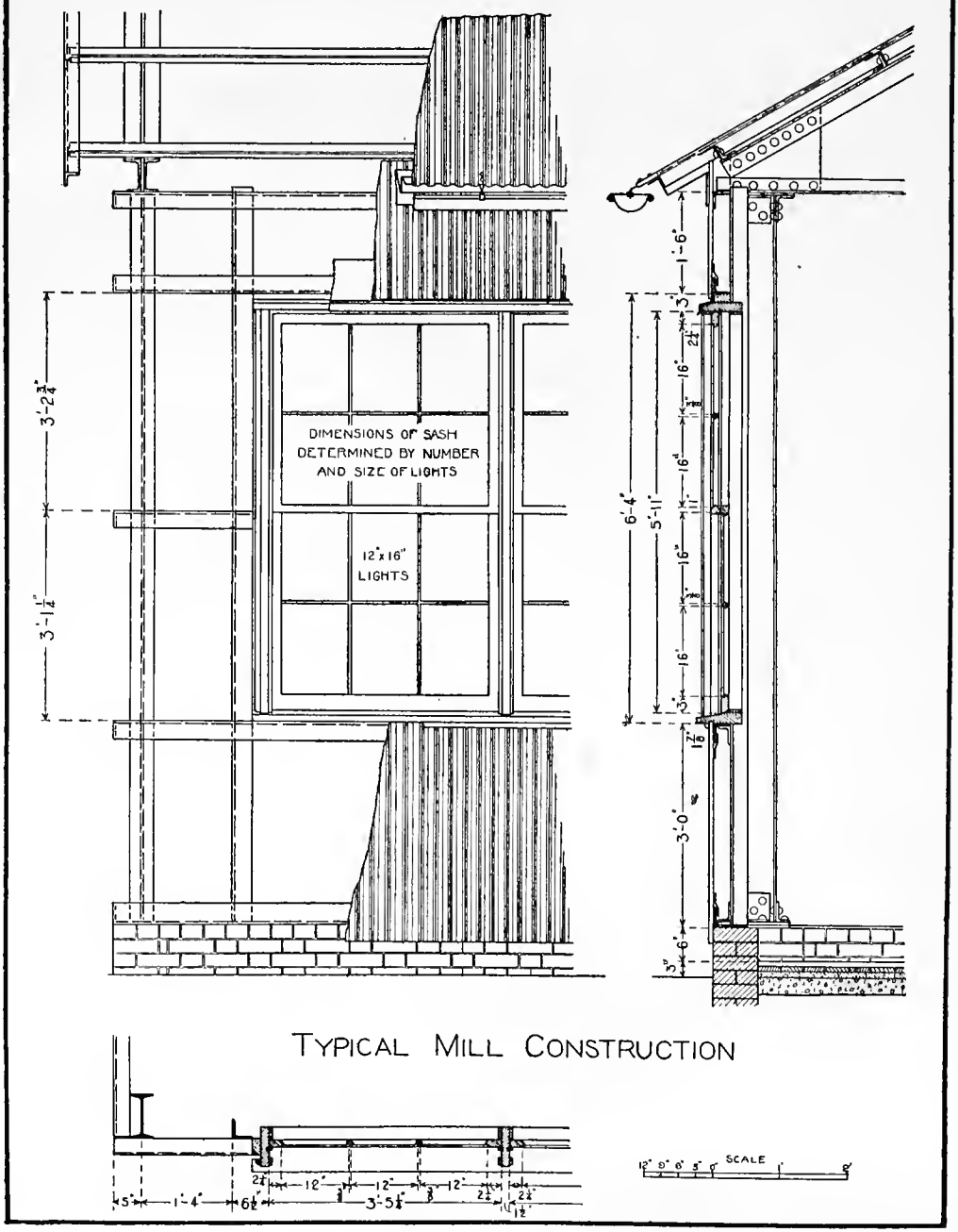

TYPICAL MILL CONSTRUCTION

Plate 51.—This plate presents the detail drawing of a corner of the building, including a part of the foundation. While making this the student should consult the previous plate, and not merely copy the lines as given. Every line should be considered in both drawings.

The corrugated iron in the top view is shown as a single wavy line. It is best to draw the sections before the elevation.

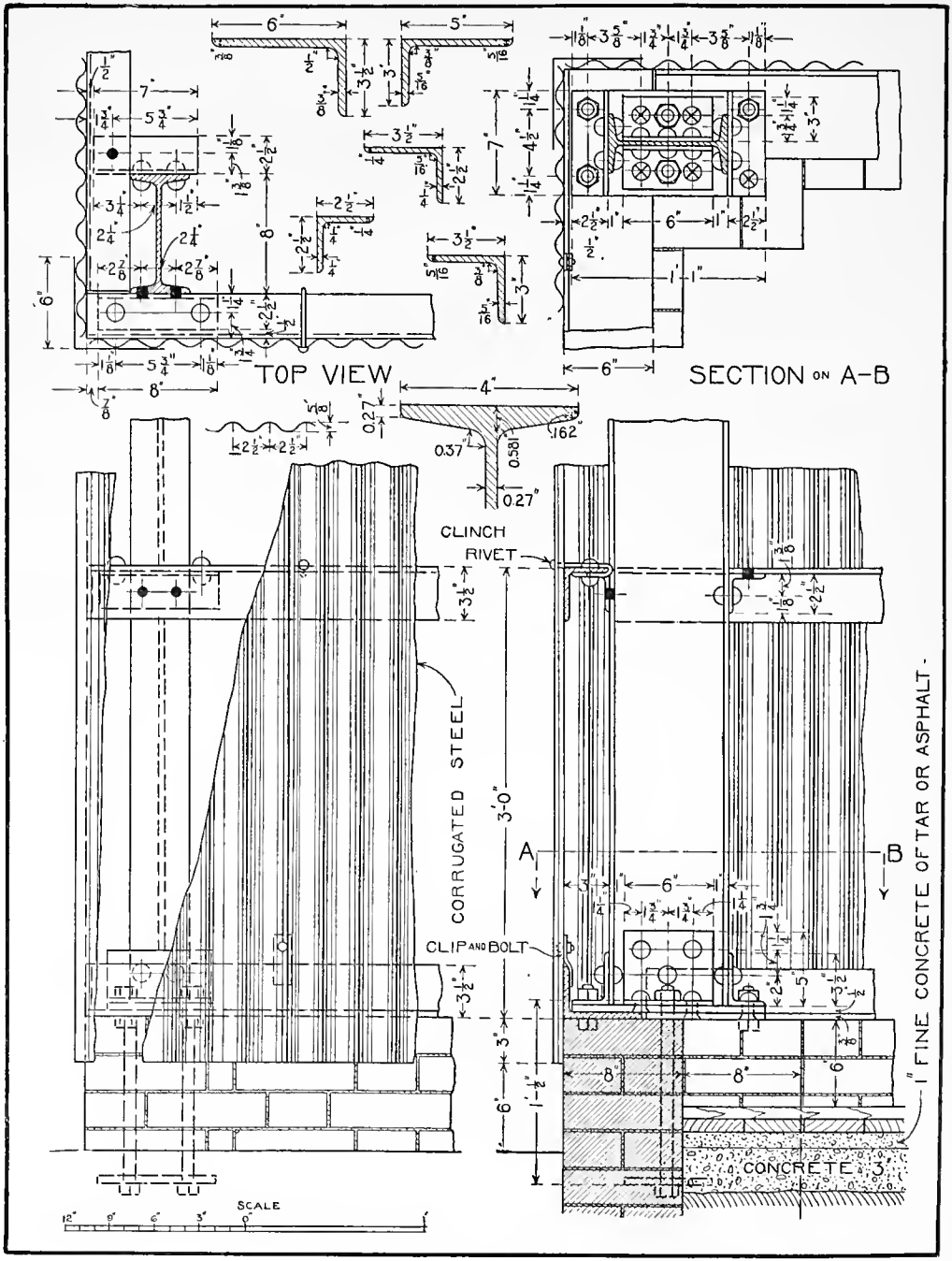
TOP VIEW
SECTION ON A-B
CLINCH RIVET
CORRUGATED STEEL
CLIP AND BOLT
3'-0"
A
B
1" FINE CONCRETE OF TAR OR ASPHALT
CONCRETE
SCALE

Plate 52.—This plate gives the detail drawings of an upper corner of the building, taking in the cornice.

The section at the right should be considered before drawing the elevation. Draw the main outlines of the frame before any of the minor details. Note that the front view of the gutter is omitted, leaving the framework to stand out clearly.

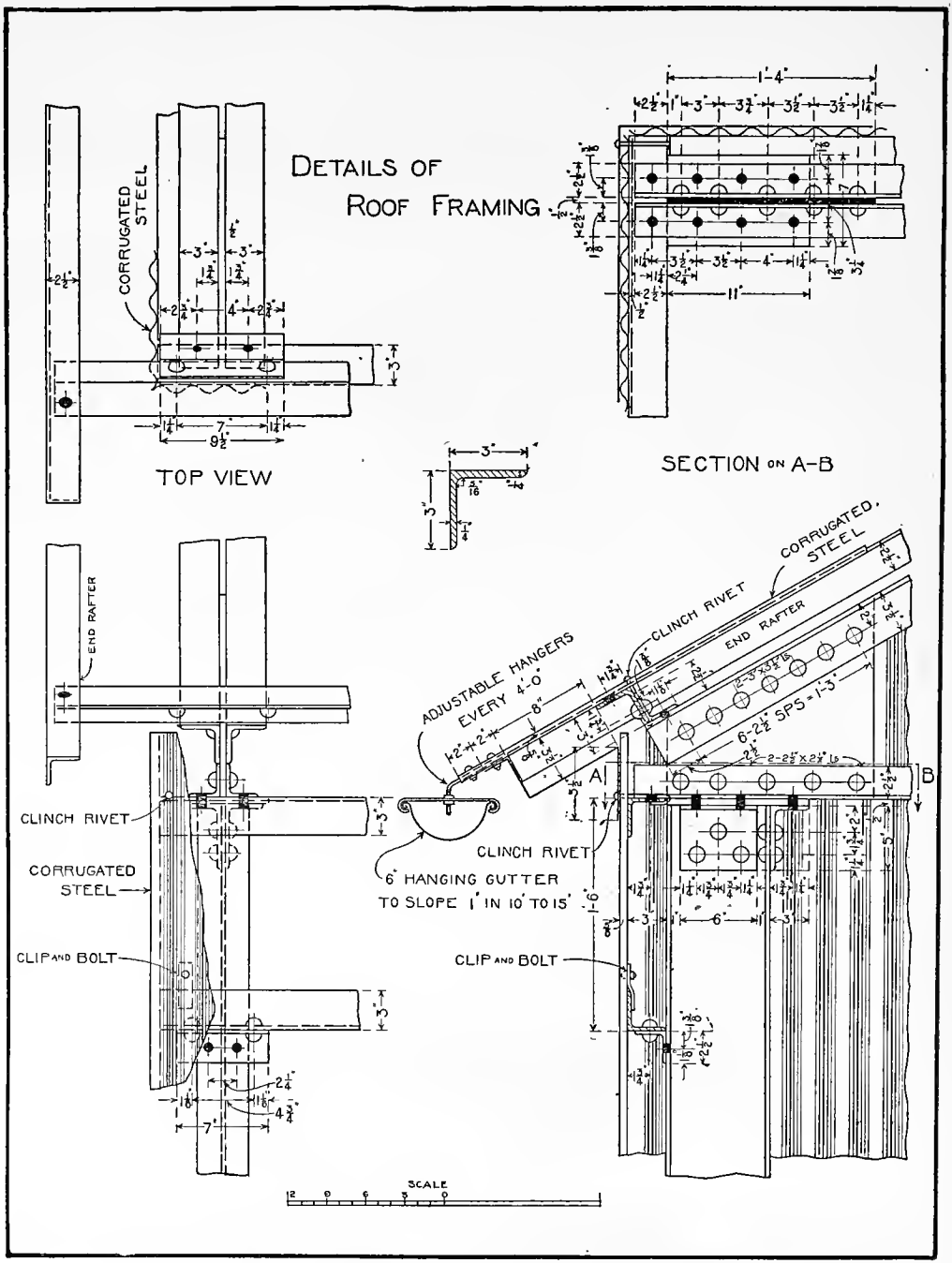
DETAILS OF
ROOF FRAMING
CORRUGATED STEEL
TOP VIEW
SECTION ON A-B
END RAFTER
CLINCH RIVET
CORRUGATED STEEL
CLIP AND BOLT
ADJUSTABLE HANGERS EVERY 4'-0"
6" HANGING GUTTER TO SLOPE 1" IN 10' TO 15'
SCALE

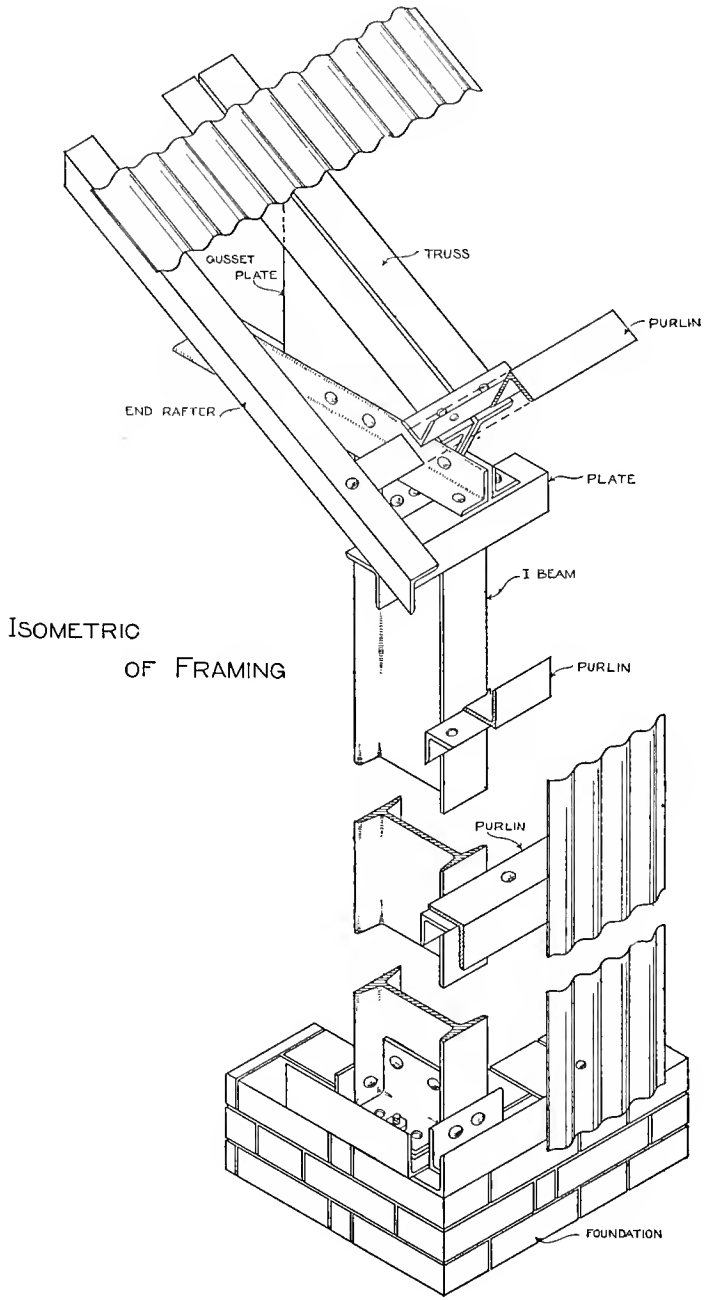

ISOMETRIC
OF FRAMING

Plate 54.—This illustration represents the detail of the window and a portion of the foundation, as shown in Plate 50. This and the above mentioned plate should be studied carefully. Draw the two sections first, and then project to the front view, completing the drawing.

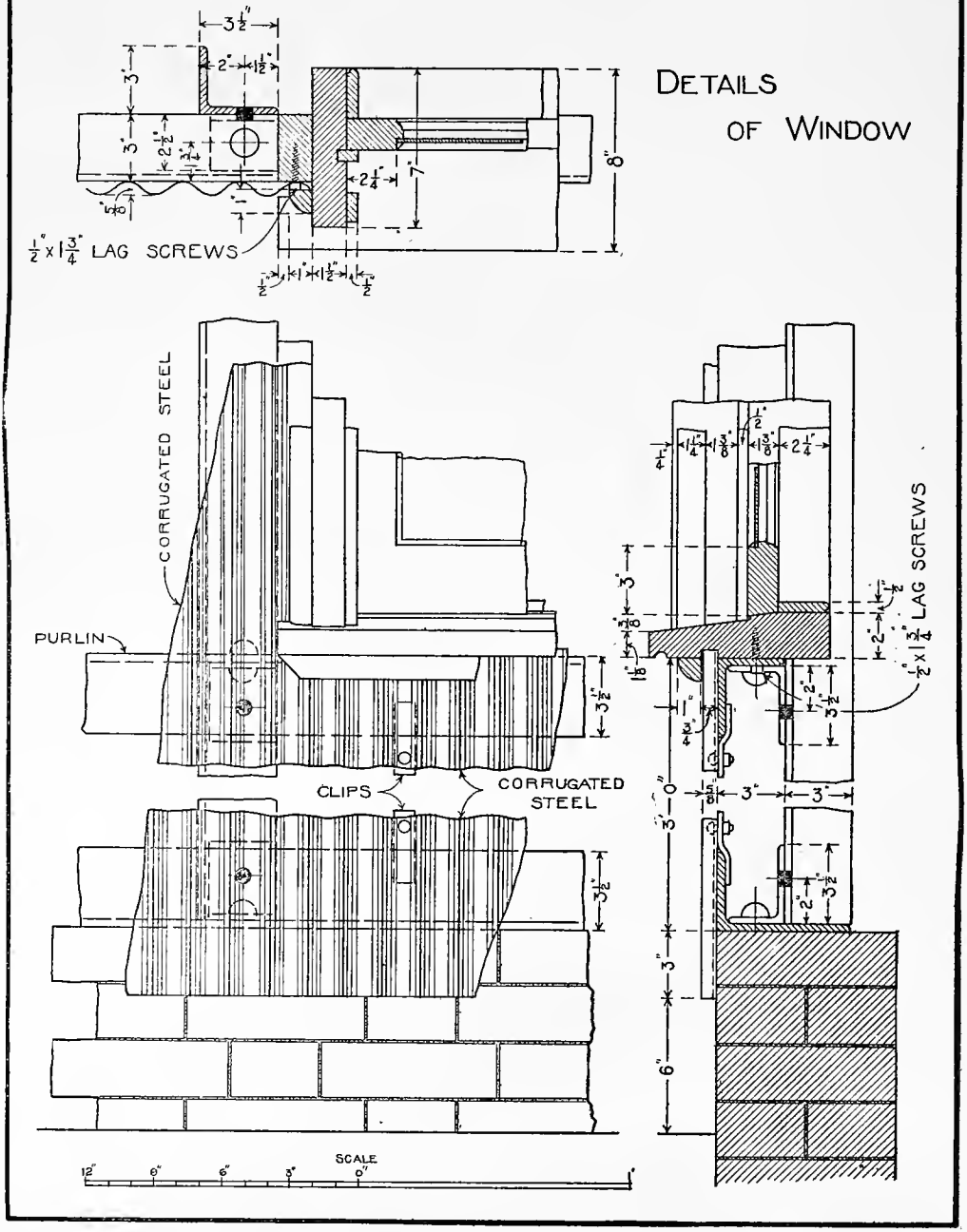
DETAILS
OF WINDOW
CORRUGATED STEEL
PURLIN
CLIPS
CORRUGATED STEEL
LAG SCREWS
SCALE

Plate 55.—This plate presents the details of the window, as shown in Plate 50. This drawing takes in the upper portion of the window as well as a section through the meeting-rail.

In making the drawing consider first the sections and the main framework, and later the minor details.

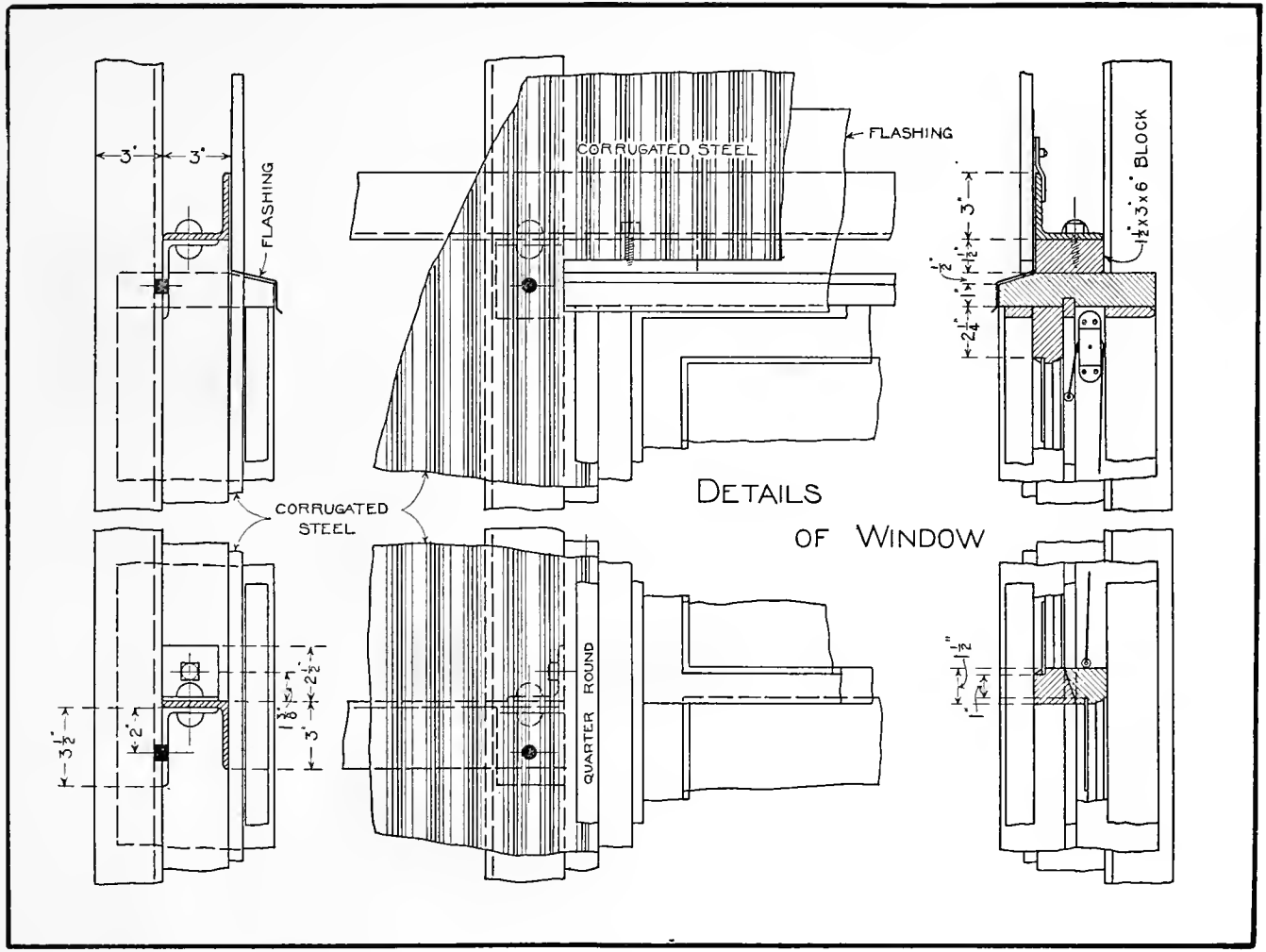
3"
3"
FLASHING
CORRUGATED STEEL
FLASHING
1½x3x6" BLOCK
3"
1½"
2"
2½"
CORRUGATED STEEL
DETAILS
OF WINDOW
3½"
2"
18"
2½"
3"
QUARTER ROUND
1½"
1"

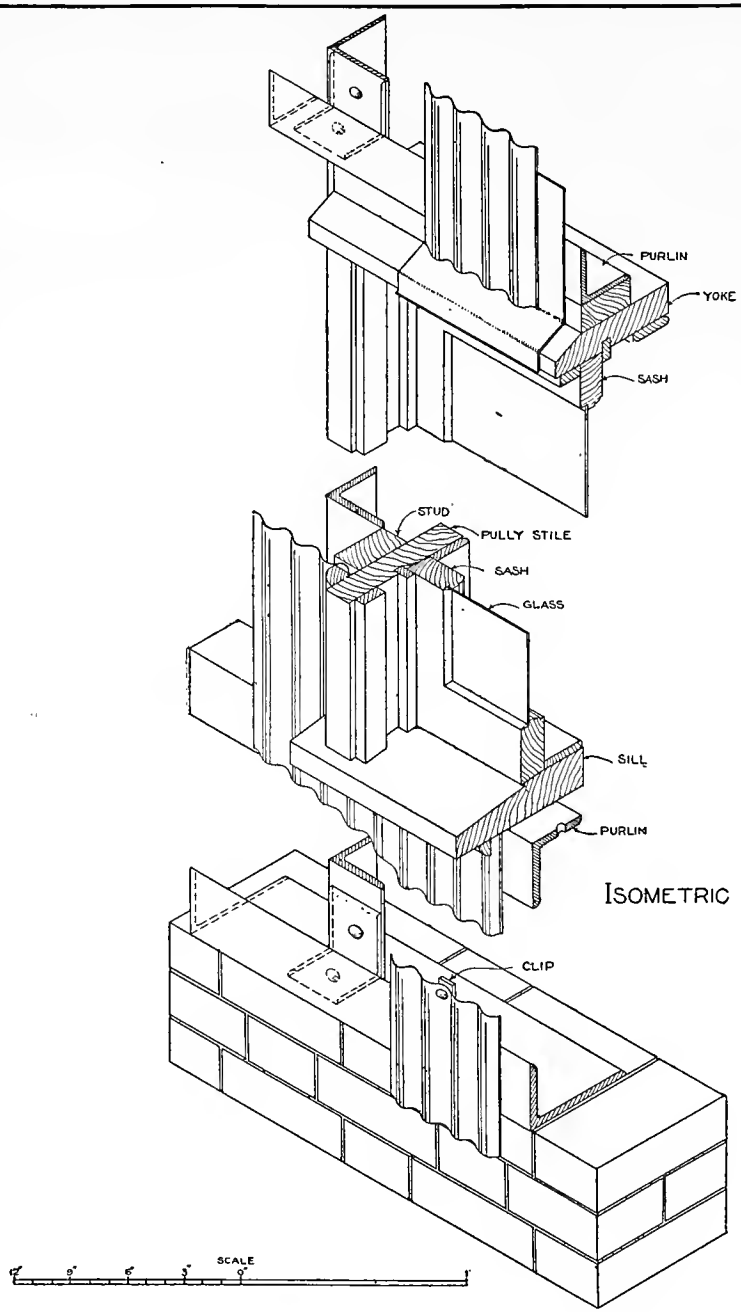

ISOMETRIC DETAIL OF WINDOW

Plate 57.—This illustration gives the general outlay of a sixty-foot truss, showing the position of its several members. In making this drawing consider the plates that follow, especially in locating the smaller details.

DETAIL OF TRUSS

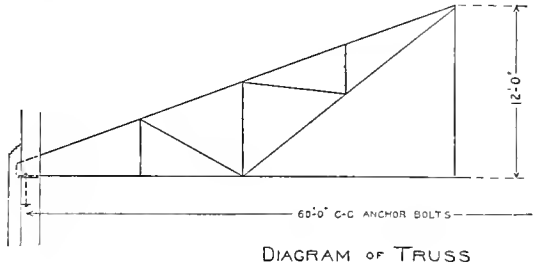

DIAGRAM OF TRUSS

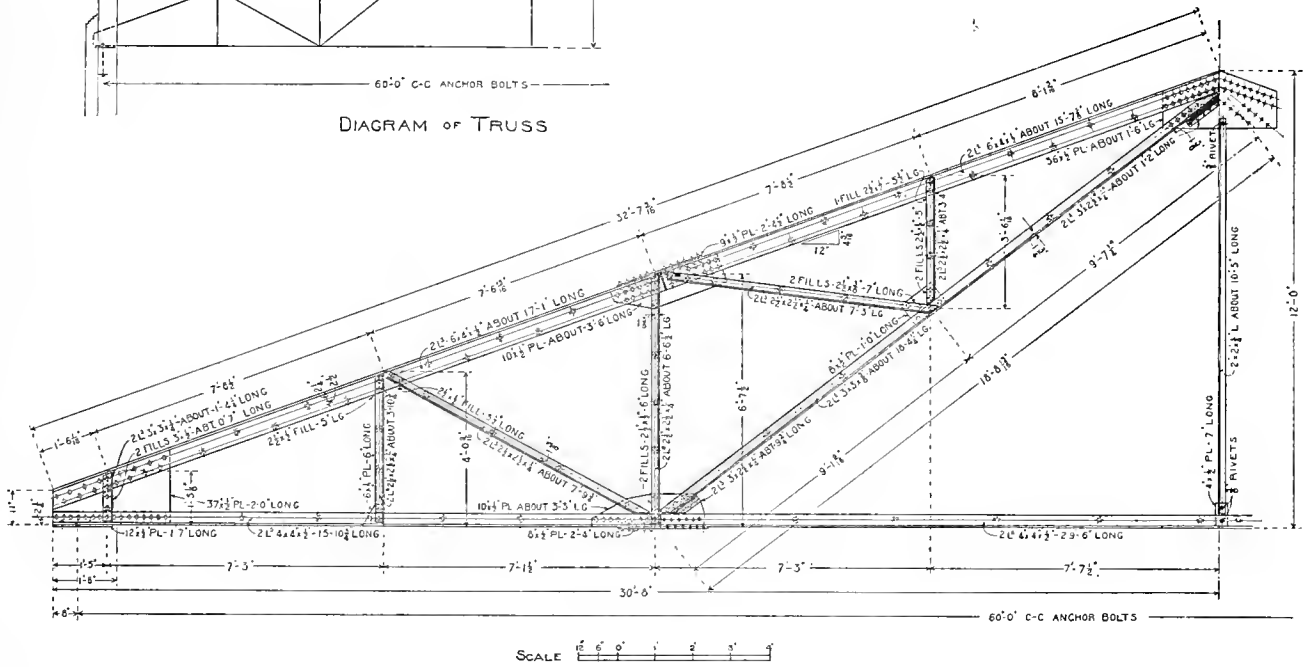

Plate 58.—This and the three following plates represent details taken at the principal connections, as shown in Plate 57.

In this as in the details mentioned several views are given to bring out all the facts concerning the connections. The student should make a careful study of every portion, noting the manner in which the members are connected.

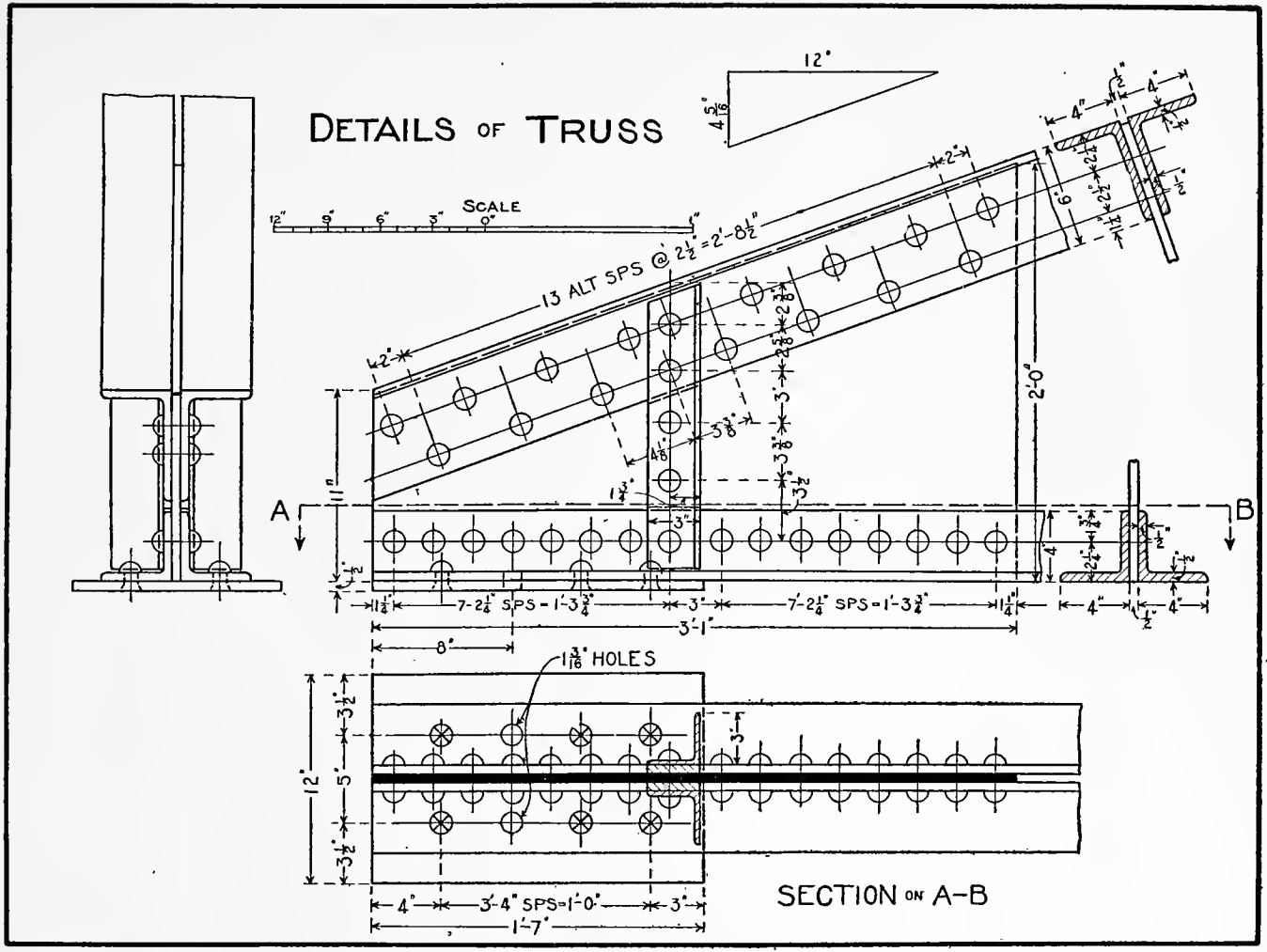
DETAILS OF TRUSS
SCALE
12" 9" 6" 3" 0" 1"
12"
4 5/16"
13 ALT SPS @ 2 1/2" = 2'-8 1/2"
2'-0"
A
B
11"
7-2 1/4" SPS = 1'-3 3/4"
3'-1"
8"
1 3/16" HOLES
12"
3'-4" SPS = 1'-0"
1'-7"
SECTION ON A-B

Plate 59.

DETAILS OF TRUSS

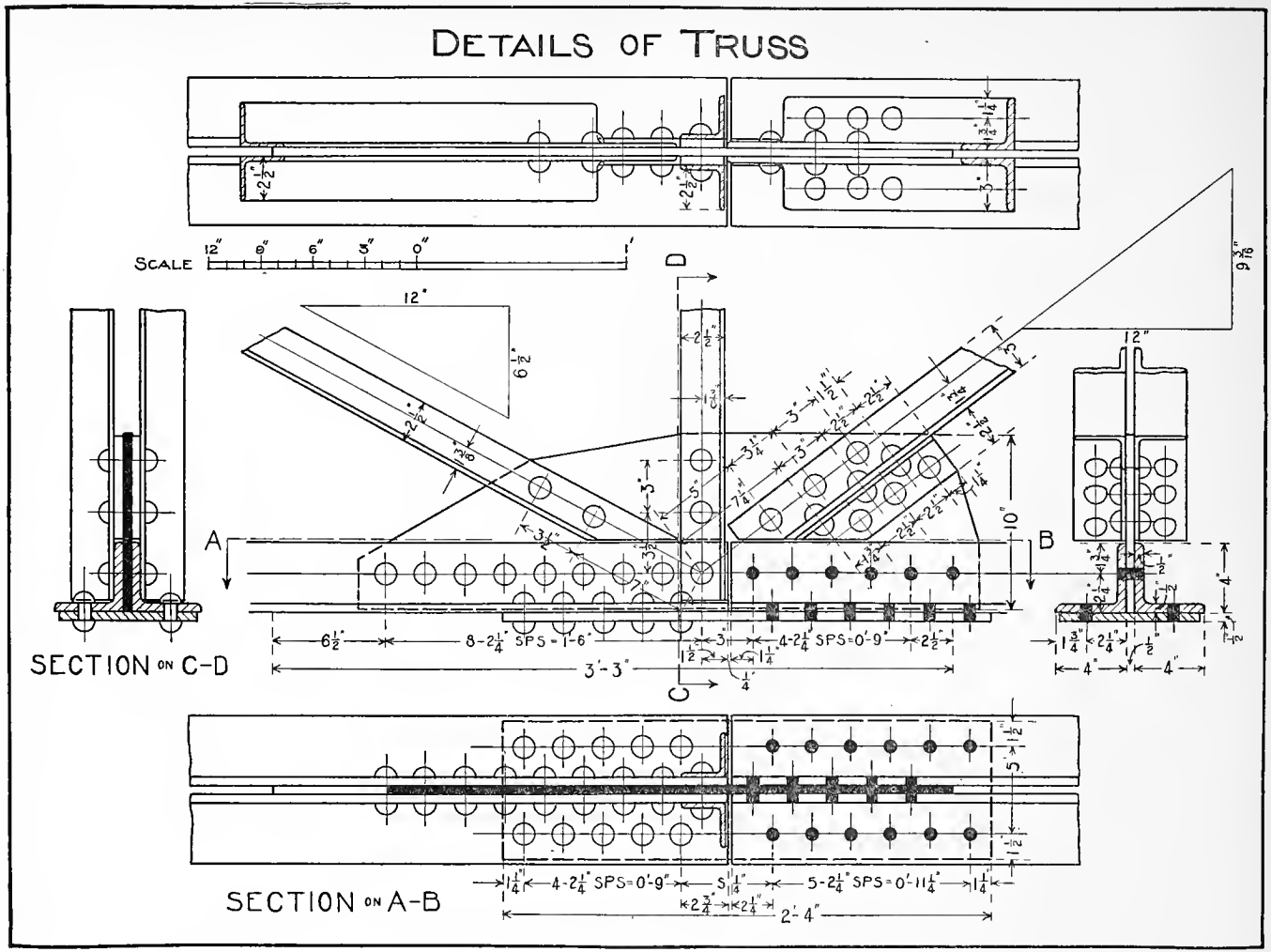

DETAILS OF TRUSS

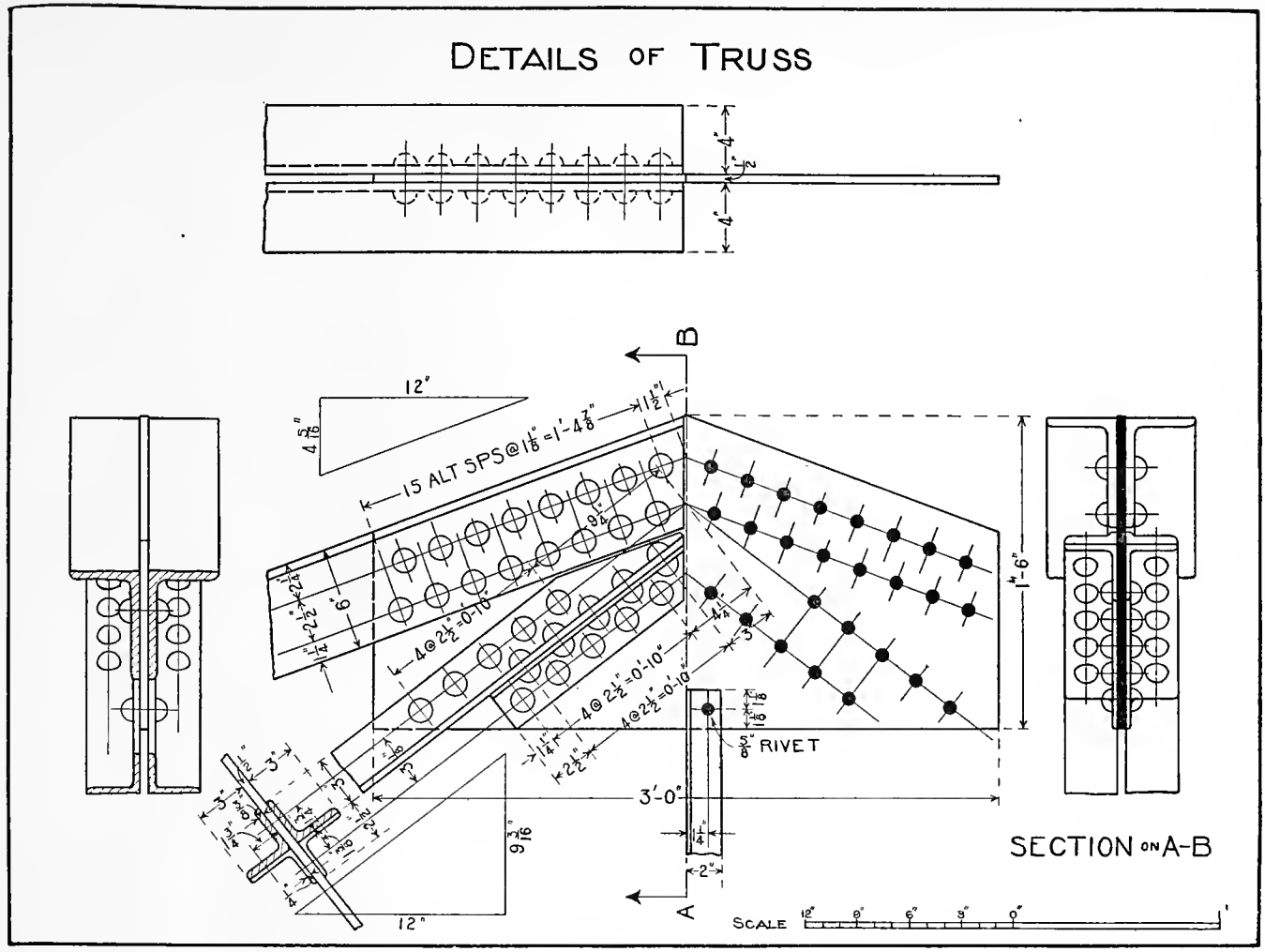

DETAILS OF TRUSS

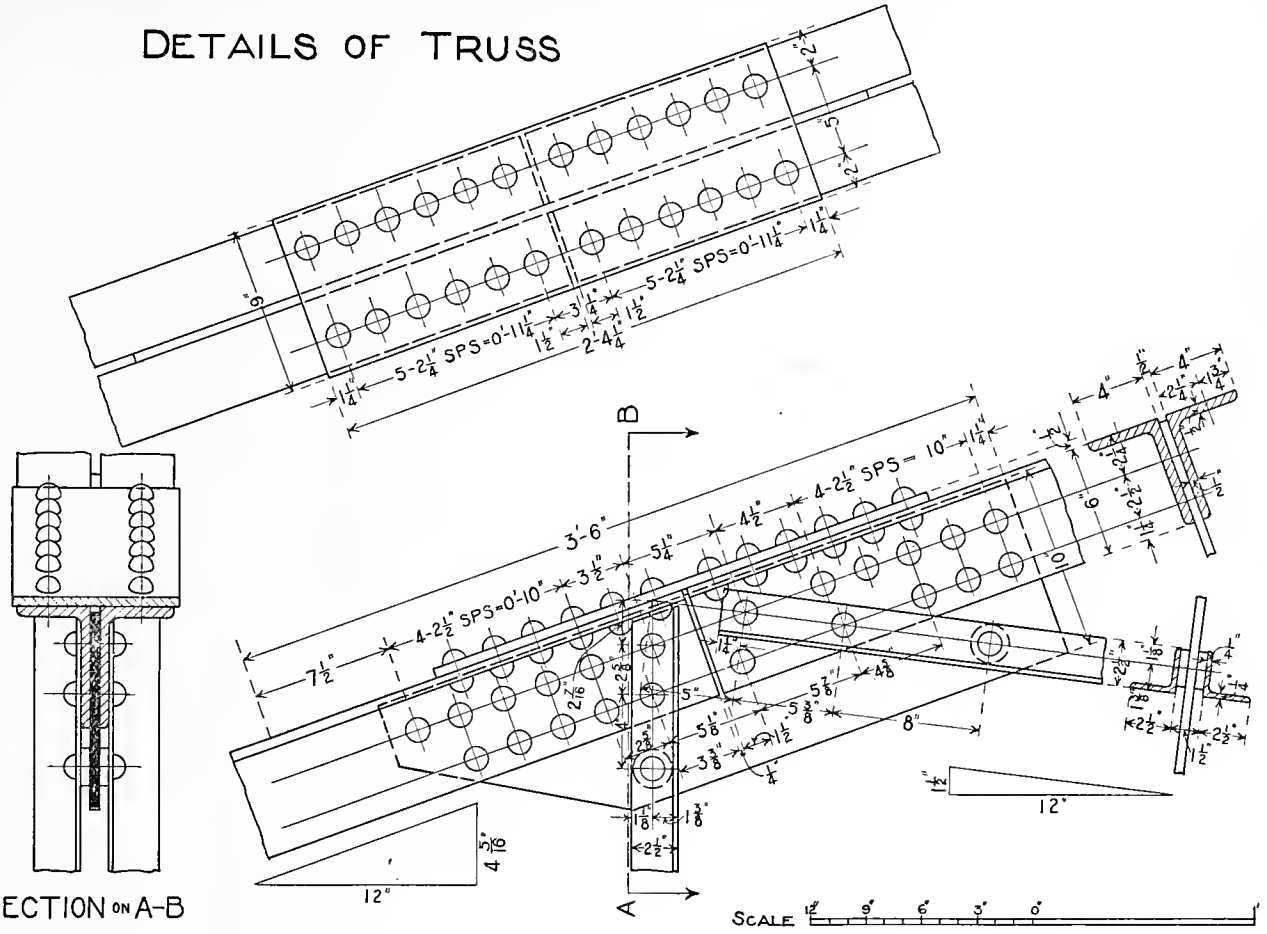

CHAPTER VI.

IRON STAIRCASE CONSTRUCTION.

Plate 62.—This plate gives the front, top and side views of an iron staircase. In making a drawing of this the student should study the three following sheets of details and not merely copy the lines given. The exercise can be made more helpful by changing the conditions of the problem slightly, and using this as a reference plate.

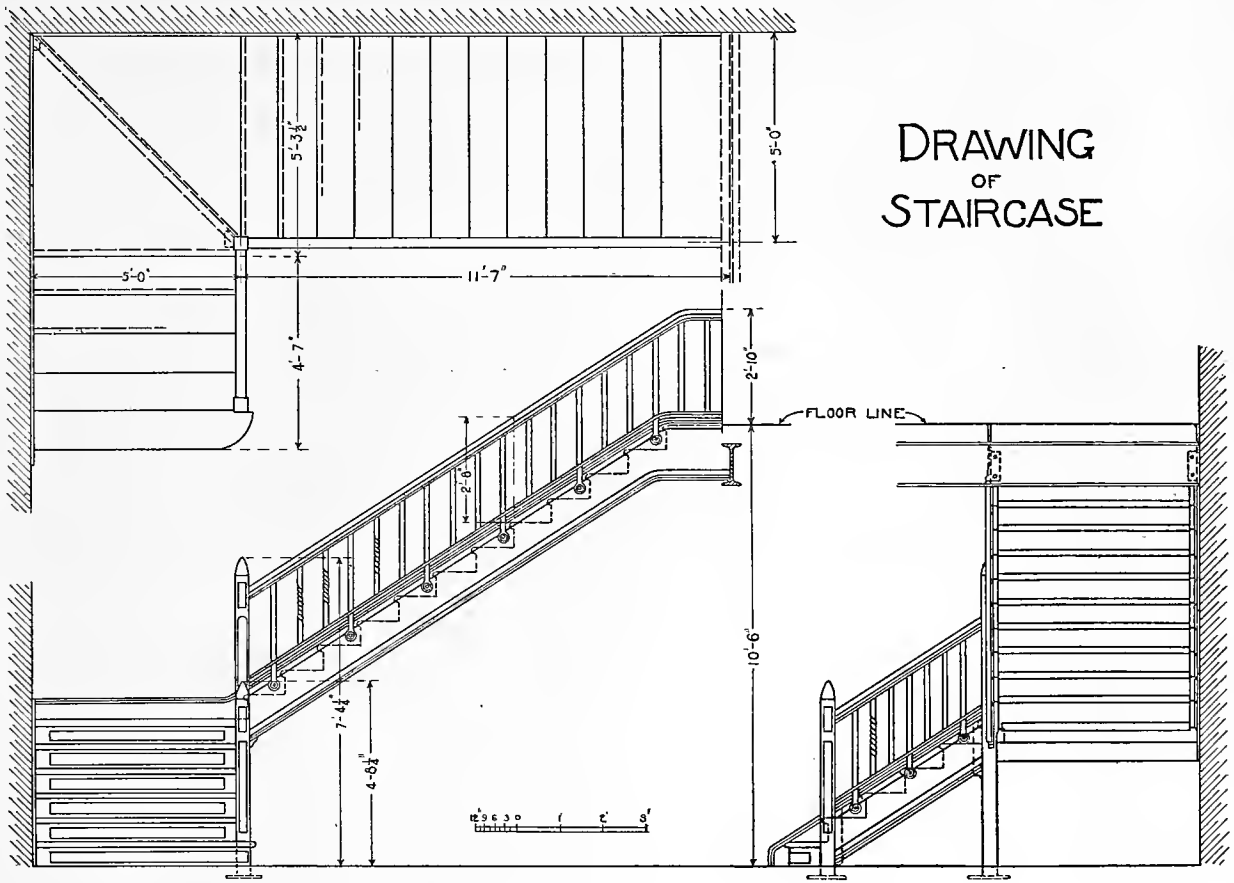
DRAWING
OF
STAIRCASE
5'-3½"
5'-0"
5'-0"
11'-7"
4'-7"
2'-10"
FLOOR LINE
2'-6"
10'-6"
7'-4½"
4'-6½"
0 1' 2' 3'

Plate 63.—This plate presents the detail drawing of the lower portion of the staircase together with the newel-post, as shown in Plate 62.

The isometric drawing in the upper left-hand portion of the sheet is given to assist the student, showing how the riser and treads are secured to the newel-post and the stringer. The student in making this drawing should first locate the risers and treads in all three views, then the newel-posts, and finally the minor details.

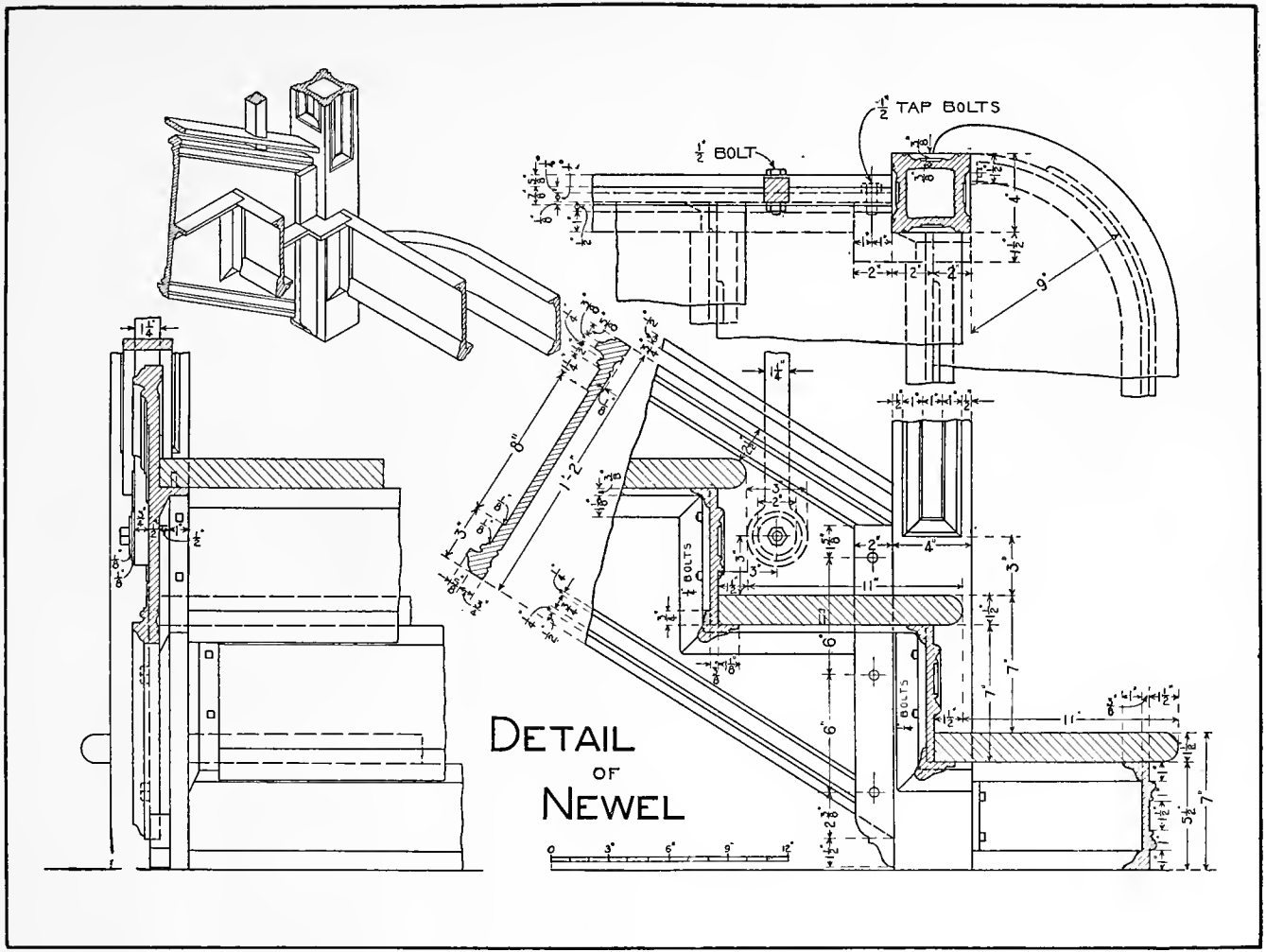
½ TAP BOLTS
½ BOLT
DETAIL
OF
NEWEL

Plate 64.—This drawing gives the detail of staircase taken at the square landing, Plate 62, showing the connections of the risers and treads with the angle-posts and the stringers. The isometric drawings are given to assist in locating the various members of the staircase and showing their connections.

To make an intelligent drawing this problem should be studied in connection with the above mentioned plate.

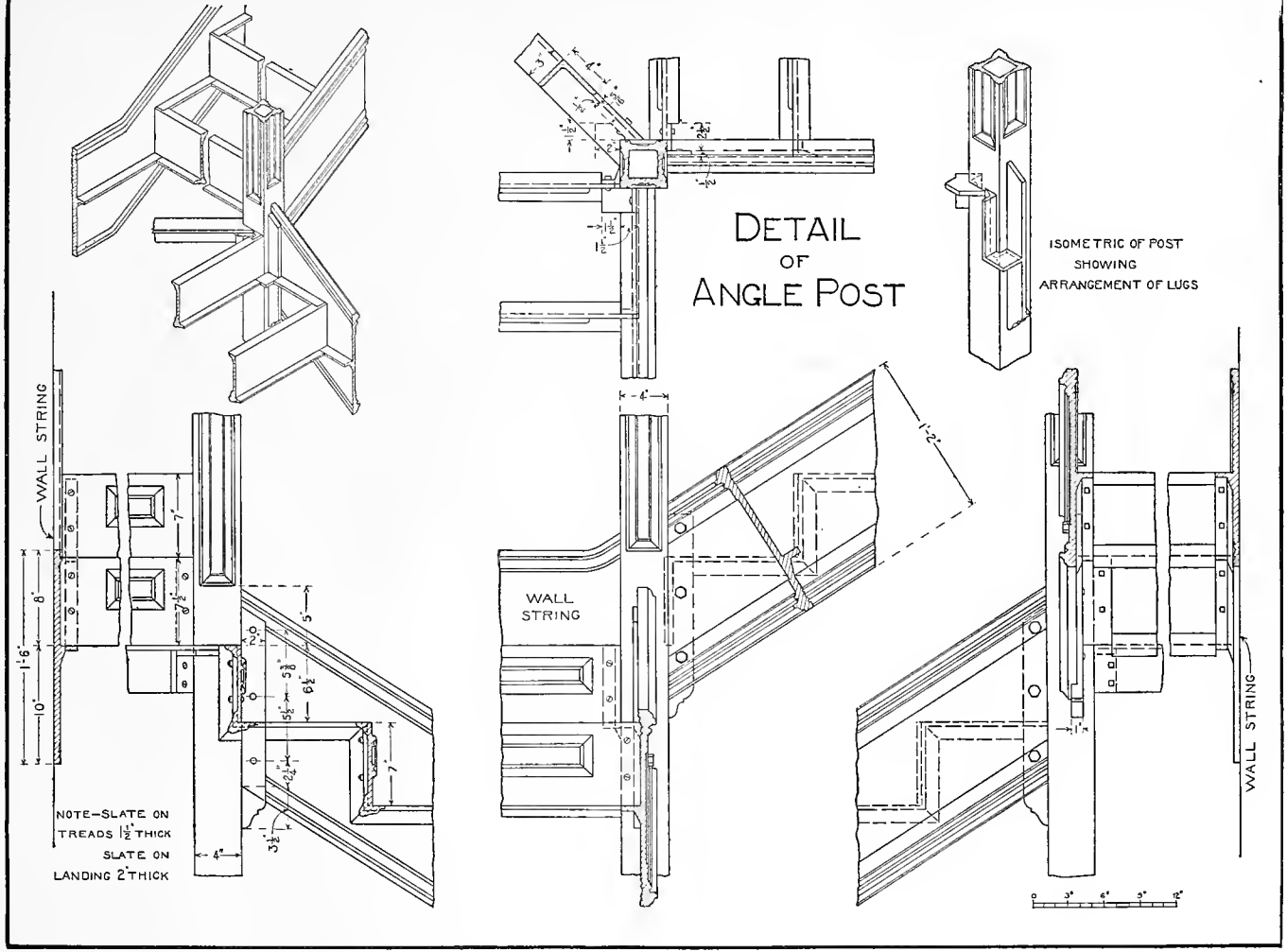
DETAIL
OF
ANGLE POST
ISOMETRIC OF POST
SHOWING
ARRANGEMENT OF LUGS
WALL STRING
WALL
STRING
WALL STRING
NOTE—SLATE ON
TREADS 1½" THICK
SLATE ON
LANDING 2" THICK

Plate 65.—This plate presents the upper section of the staircase (Plate 62), showing the connections between the stringer and the I-beam girder.

Detail of String

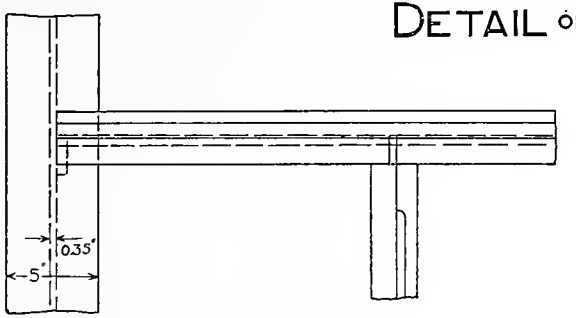

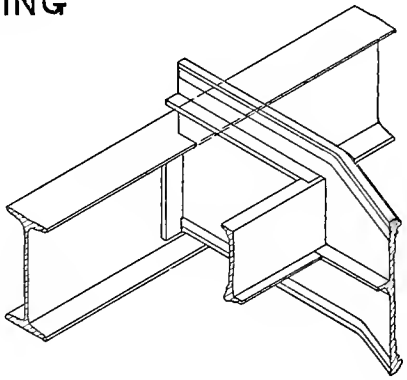

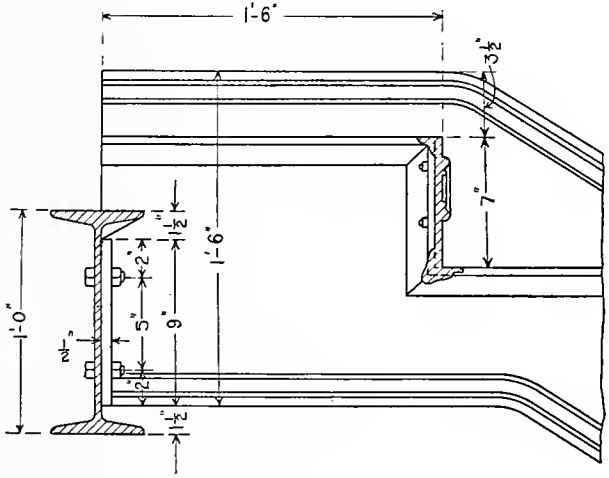

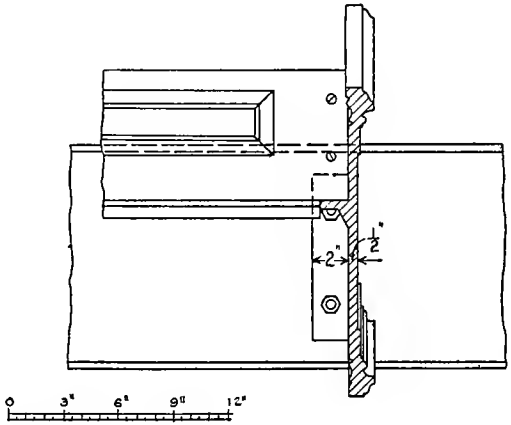

Plate 66.—This drawing presents three views of an iron staircase which is enclosed on three sides by a brick wall.

The student should first consider the plan, after which carefully lay out the outline of the treads and risers in both the front and side views. The following plates should be carefully studied in relation to the minor details.

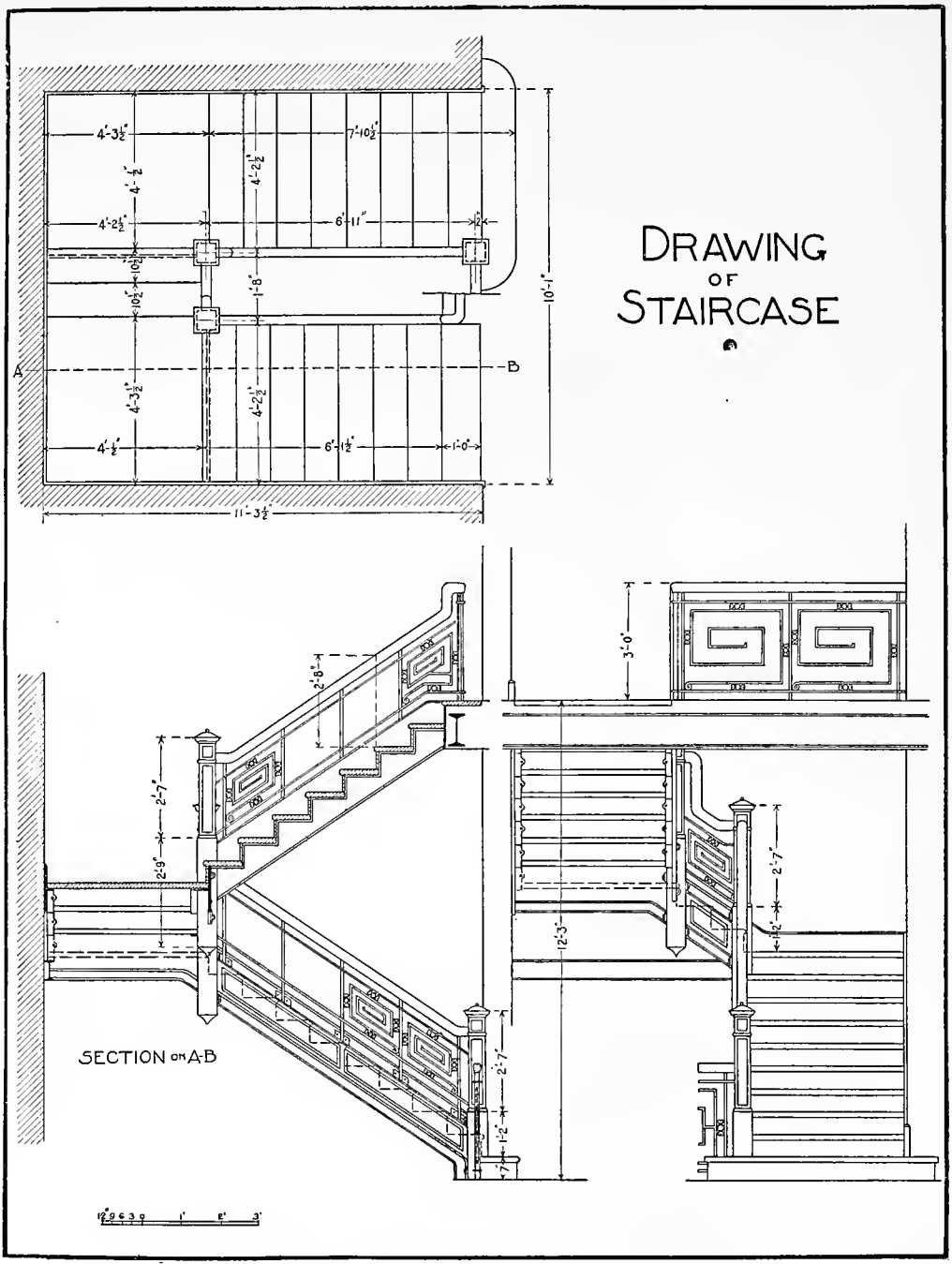
DRAWING
OF
STAIRCASE
SECTION ON A-B
4'-3½"
7'-10½"
4'-½"
4'-2½"
6'-11"
10½"
1'-8"
10'-1"
A
B
4'-3½"
4'-2½"
4'-½"
6'-1½"
1'-0"
11'-3½"
2'-8"
2'-7"
2'-9"
3'-0"
12'-3"
2'-7"
1'-2"
2'-7"
1'-2"
7"
12 9 6 3 0 1' 2' 3'

Plate 67.—This plate presents the working drawing of the lower section of the staircase, including a portion of the newel-post. By the isometric drawing one will readily see the connections of the various parts. The details should be drawn as large as possible. The iron dowel protruding from the lug on the stringer, as represented at A, is arranged to hold the slate tread in position.

DETAIL OF STAIR

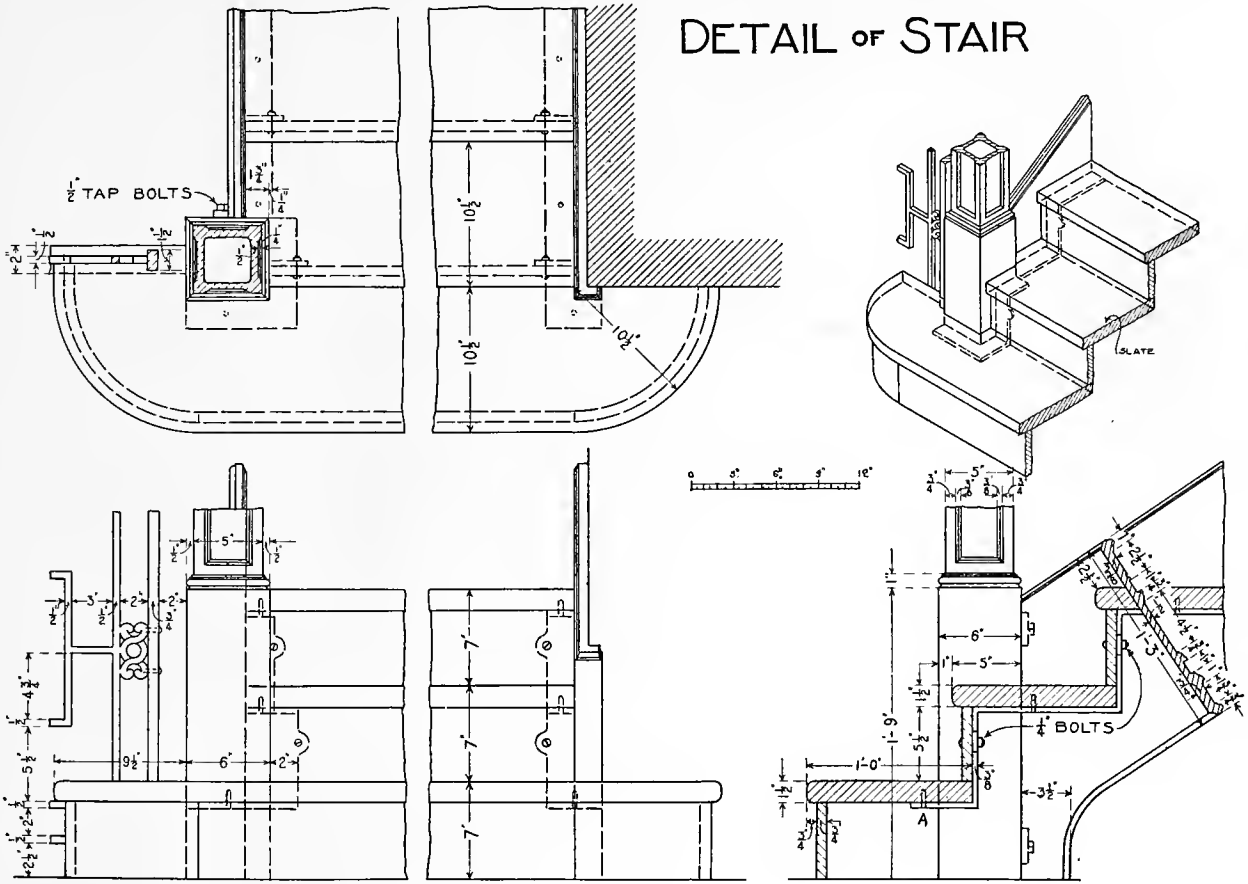

Plate 68.—In this drawing we have the front, top and side views of an angle-post, showing how the risers and treads are connected with the stringers and angle-post. In making the drawing the student should first locate the angle-post in the three views, then the risers and treads, finally the lug connections. If he follows this method little difficulty will be encountered.

DETAIL OF ANGLE POST

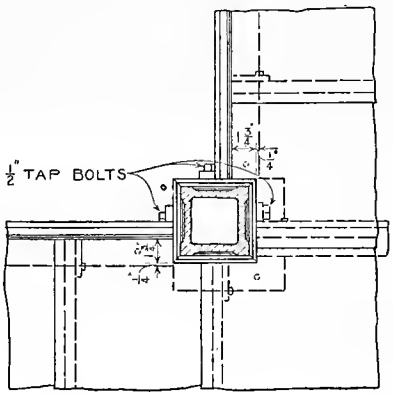

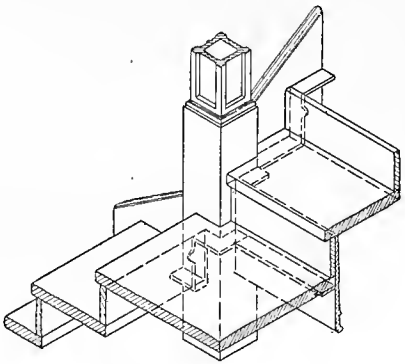

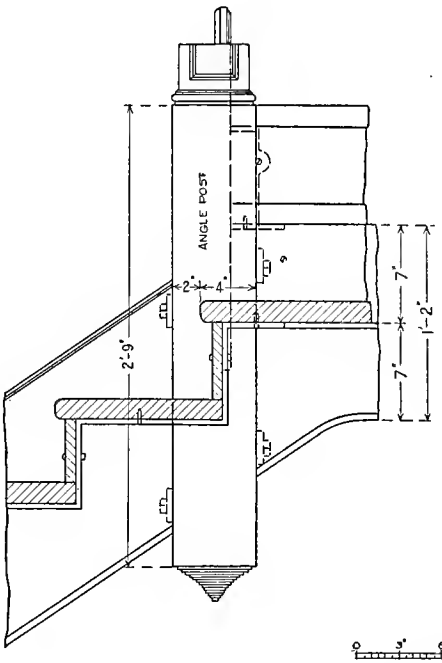

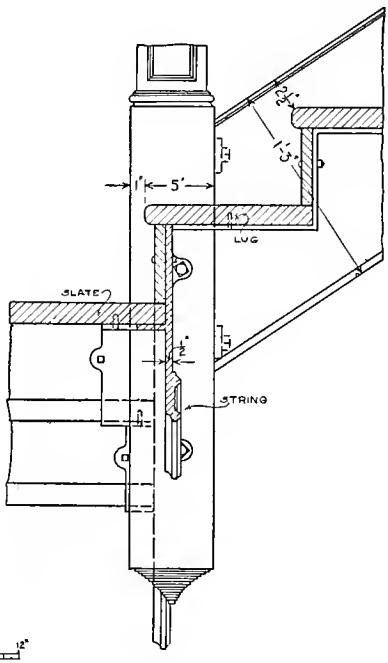

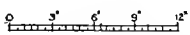

Plate 69.—This drawing gives the connection between the upper portion of the staircase and the floor construction. First locate the I-beam, then the floor and ceiling lines, after which the main lines of the stringer and tread, finally the small details. The isometric drawing in the upper left-hand section of the plate will greatly assist the student.

STAIR DETAILS

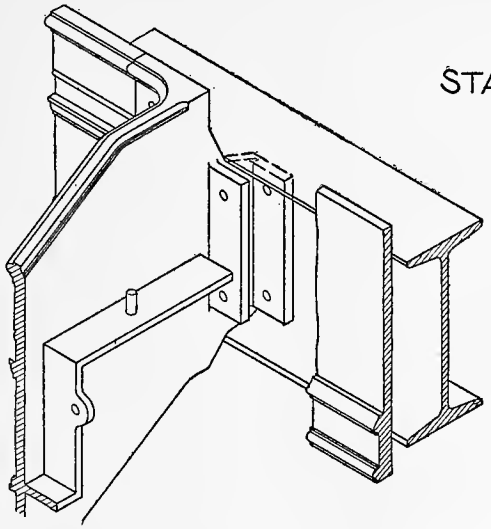

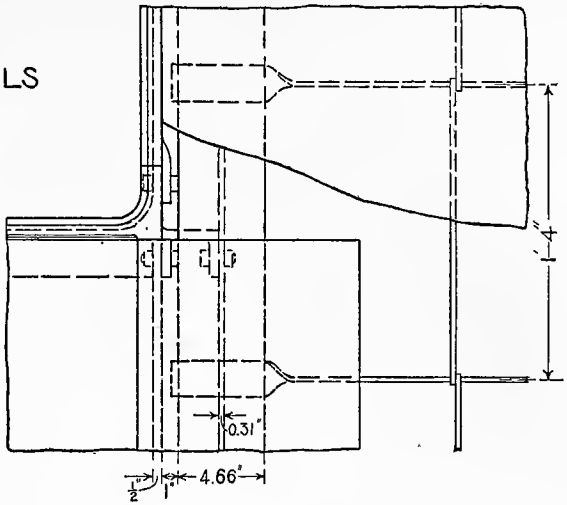

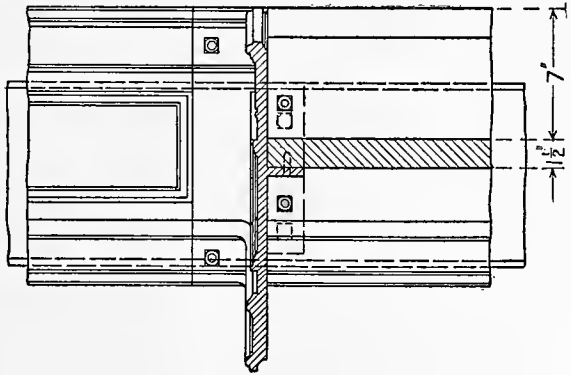

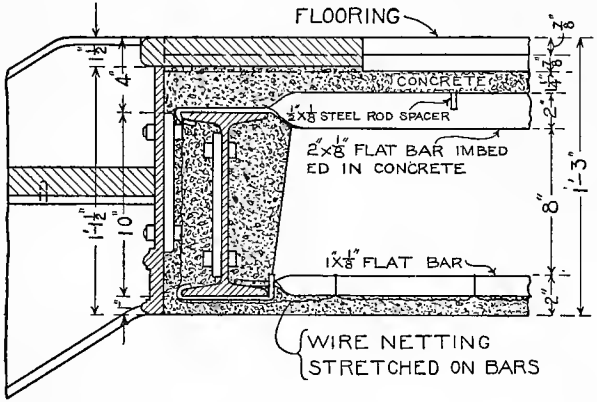

Plate 70.—This and the following four plates present an iron staircase in which winders are introduced. The main features in this problem are not unlike those of the two foregoing examples, and by carefully studying the isometric drawings little or no difficulty will be encountered.

CAST IRON STAIRCASE

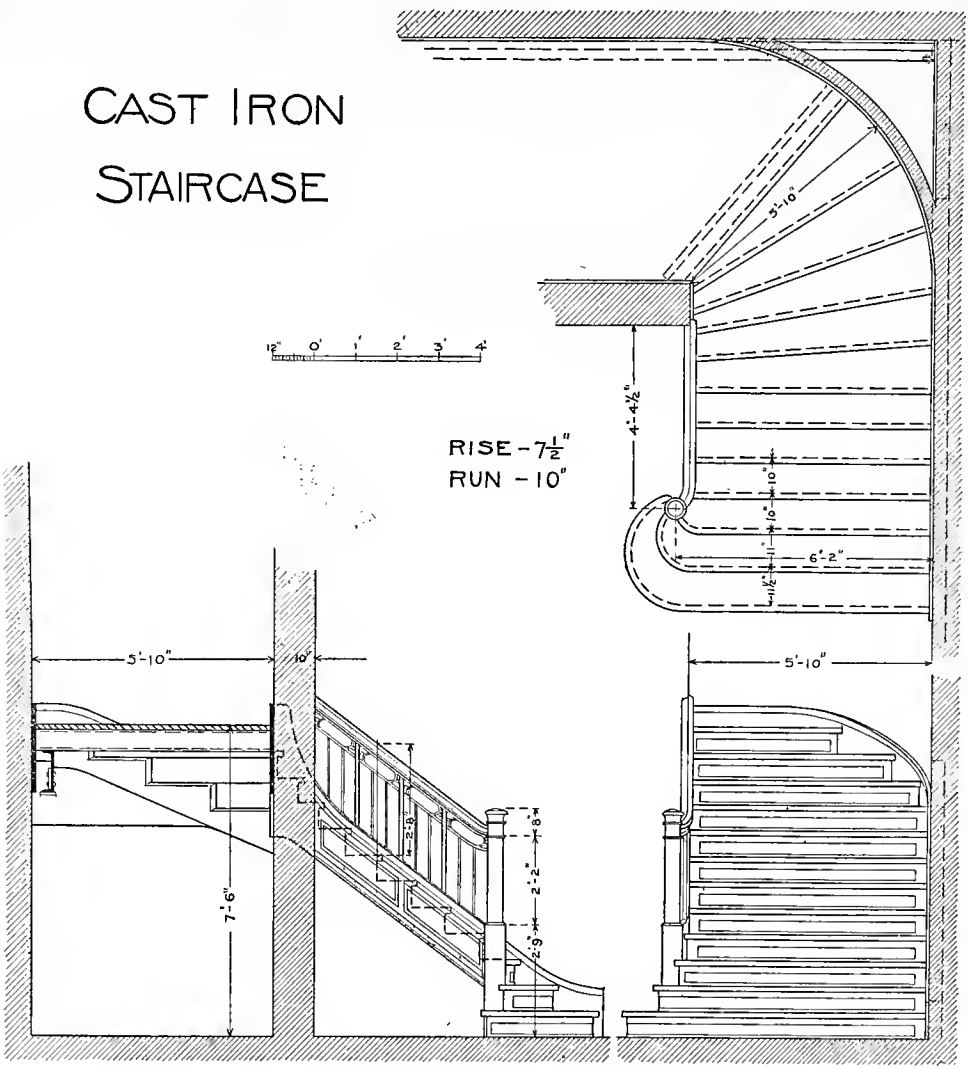

DETAIL OF NEWEL

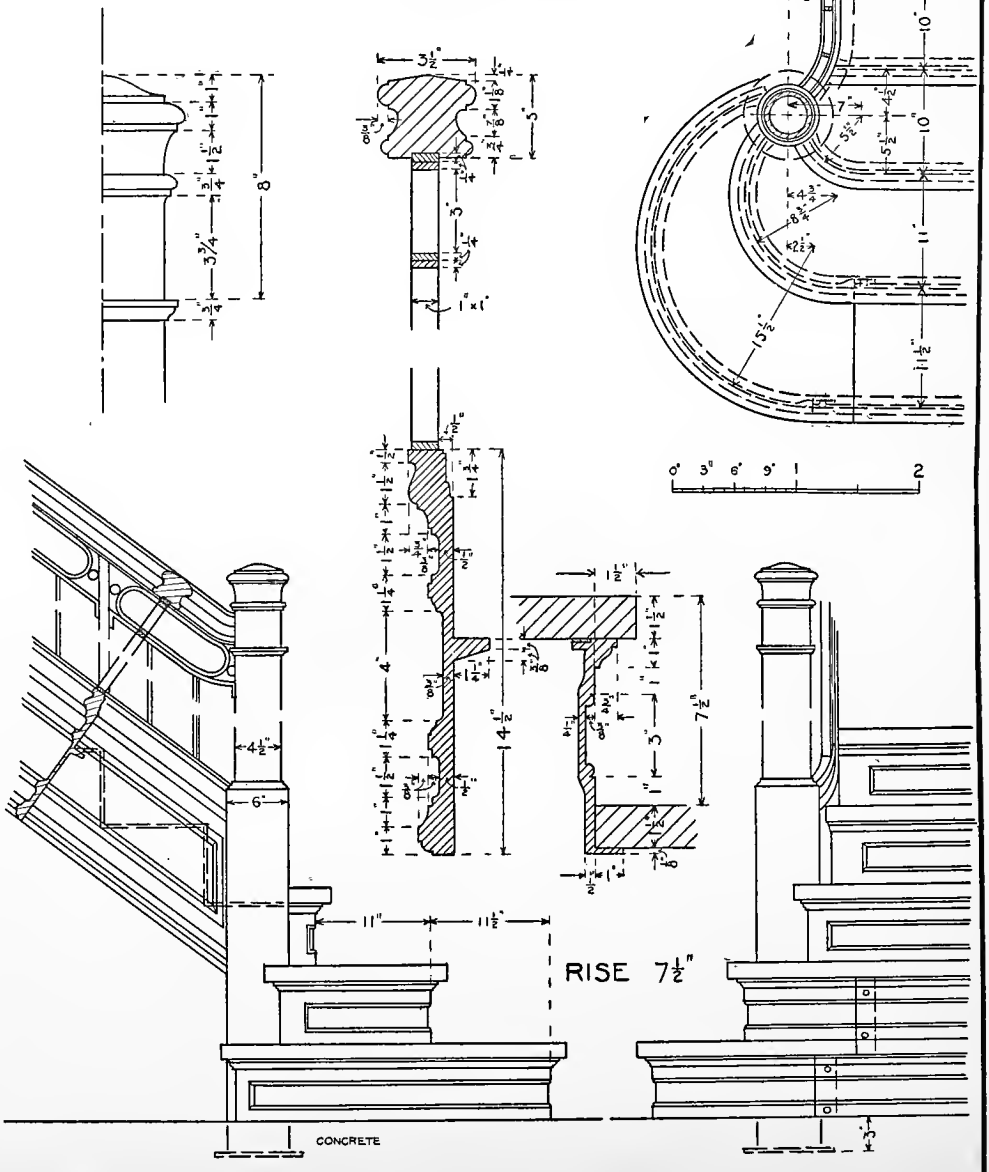

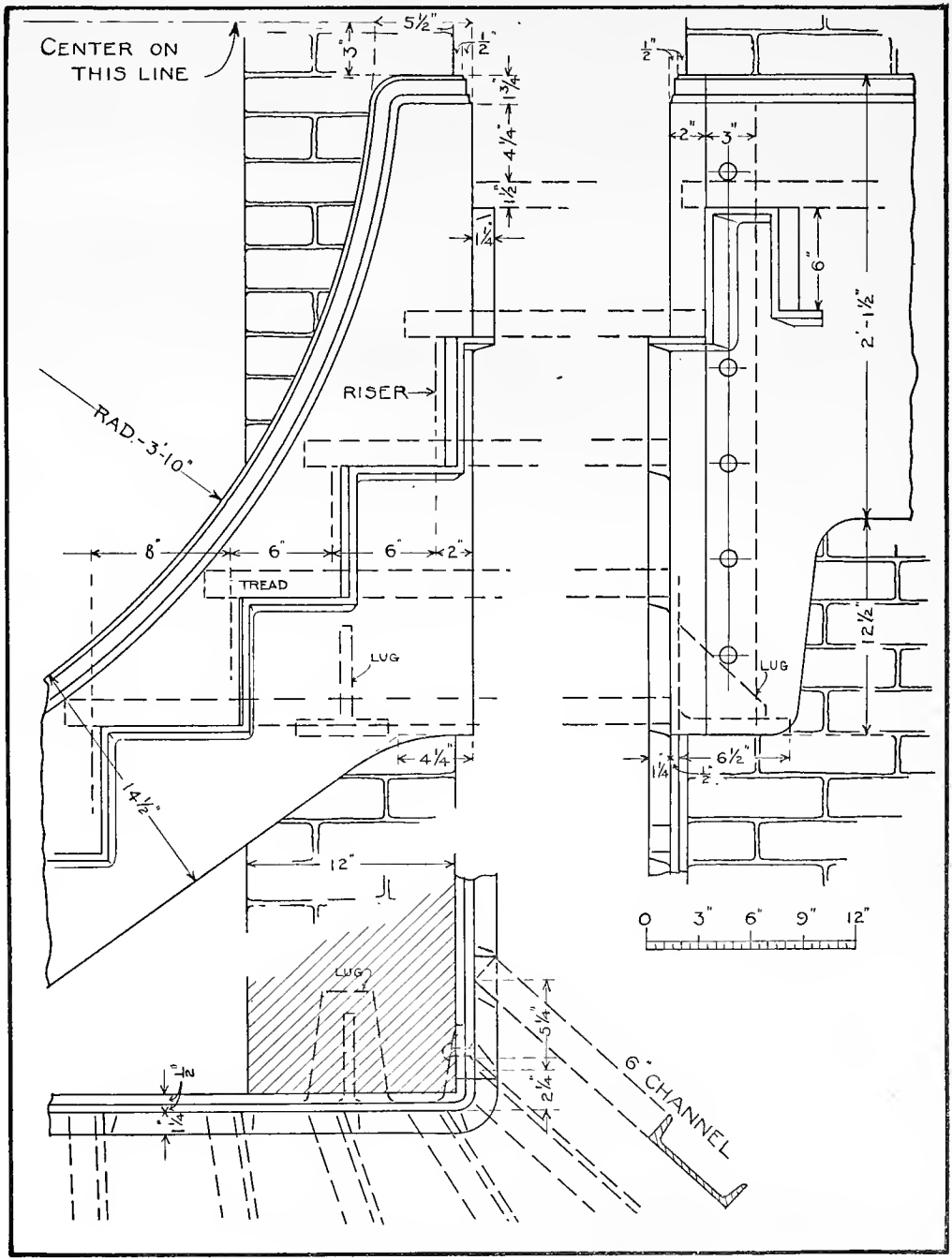
CENTER ON THIS LINE
5½"
3"
½"
1¾"
4¼"
1½"
¼"
RISER
RAD.-3'-10"
8"
6"
6"
2"
TREAD
LUG
14½"
4¼"
12"
LUG
½"
2"
3"
6"
2'-1½"
12½"
LUG
1¼"
6½"
½"
0 3" 6" 9" 12"
5¼"
2¼"
6" CHANNEL
½"
1¼"

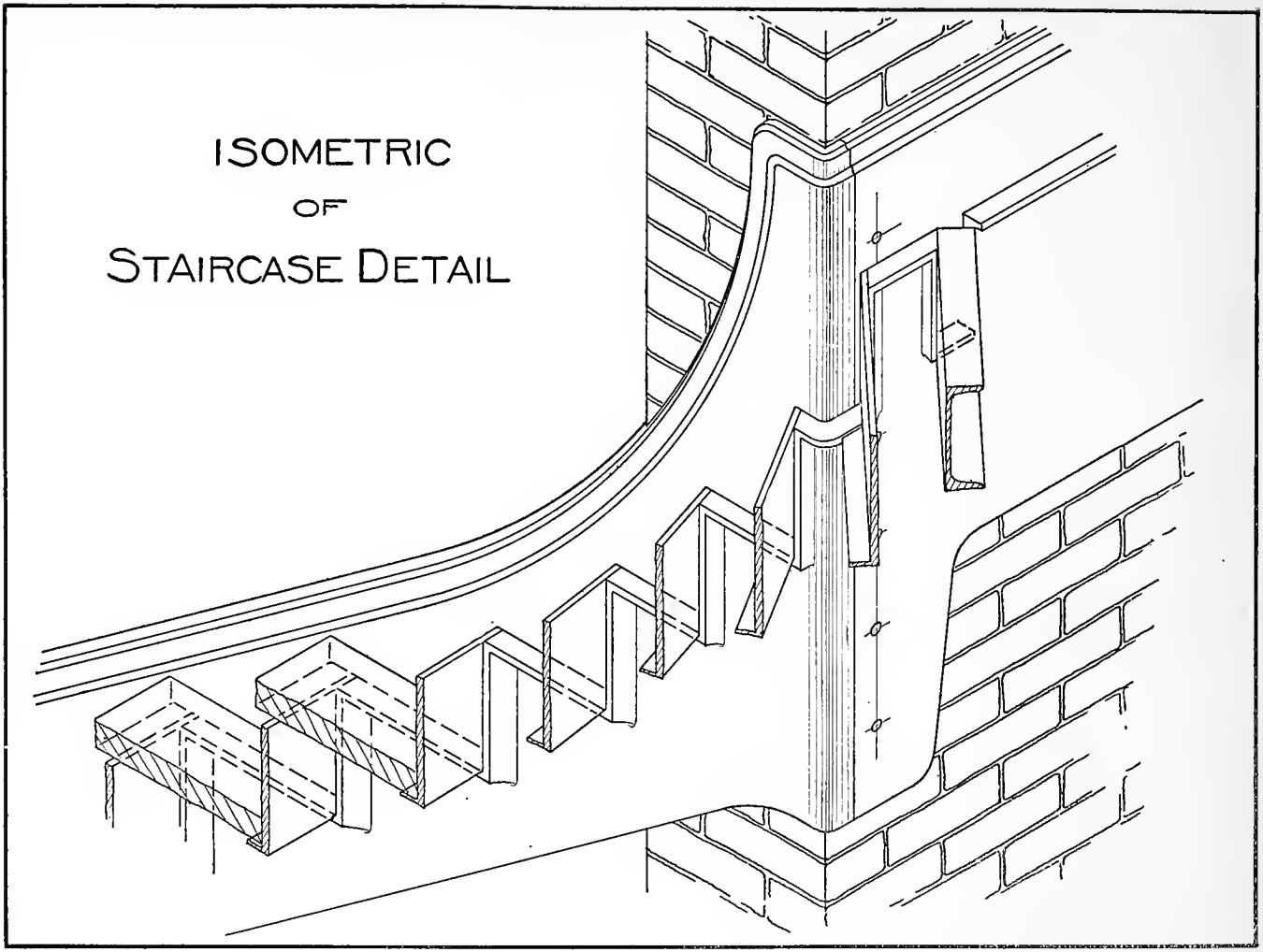
ISOMETRIC
OF
STAIRCASE DETAIL

CHAPTER VII.

ORNAMENTAL IRON WORK.

Plate 74.—This and the following plates are given as simple exercises in ornamental iron construction. To derive the full benefit the student should make the drawings to as large a scale as possible.

Plate 74.

DETAIL OF WROUGHT IRON RAILING

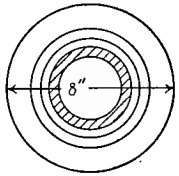

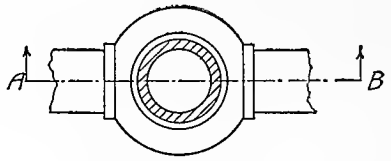

Top View

Detail of Connection at -A.

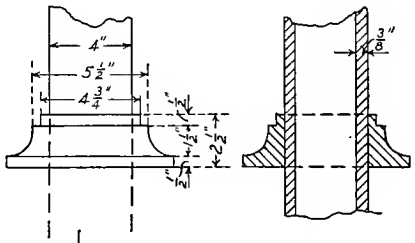

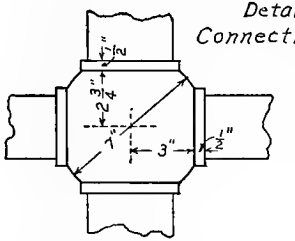

Detail of Connection at -B

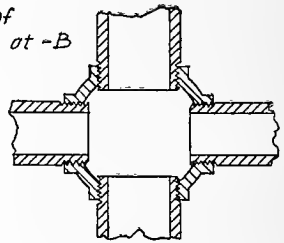

Front View

Section A-B.

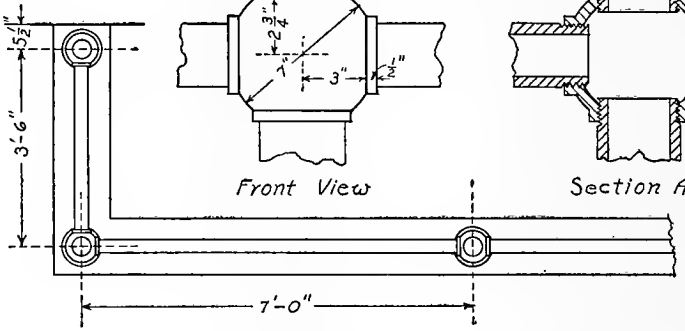

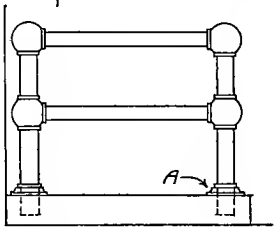

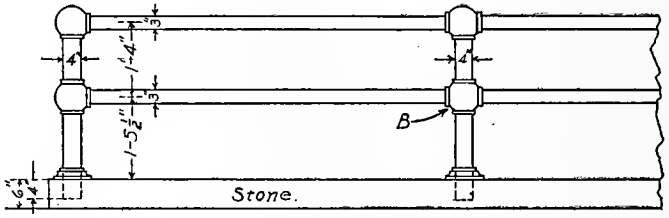

DETAIL OF RAILING

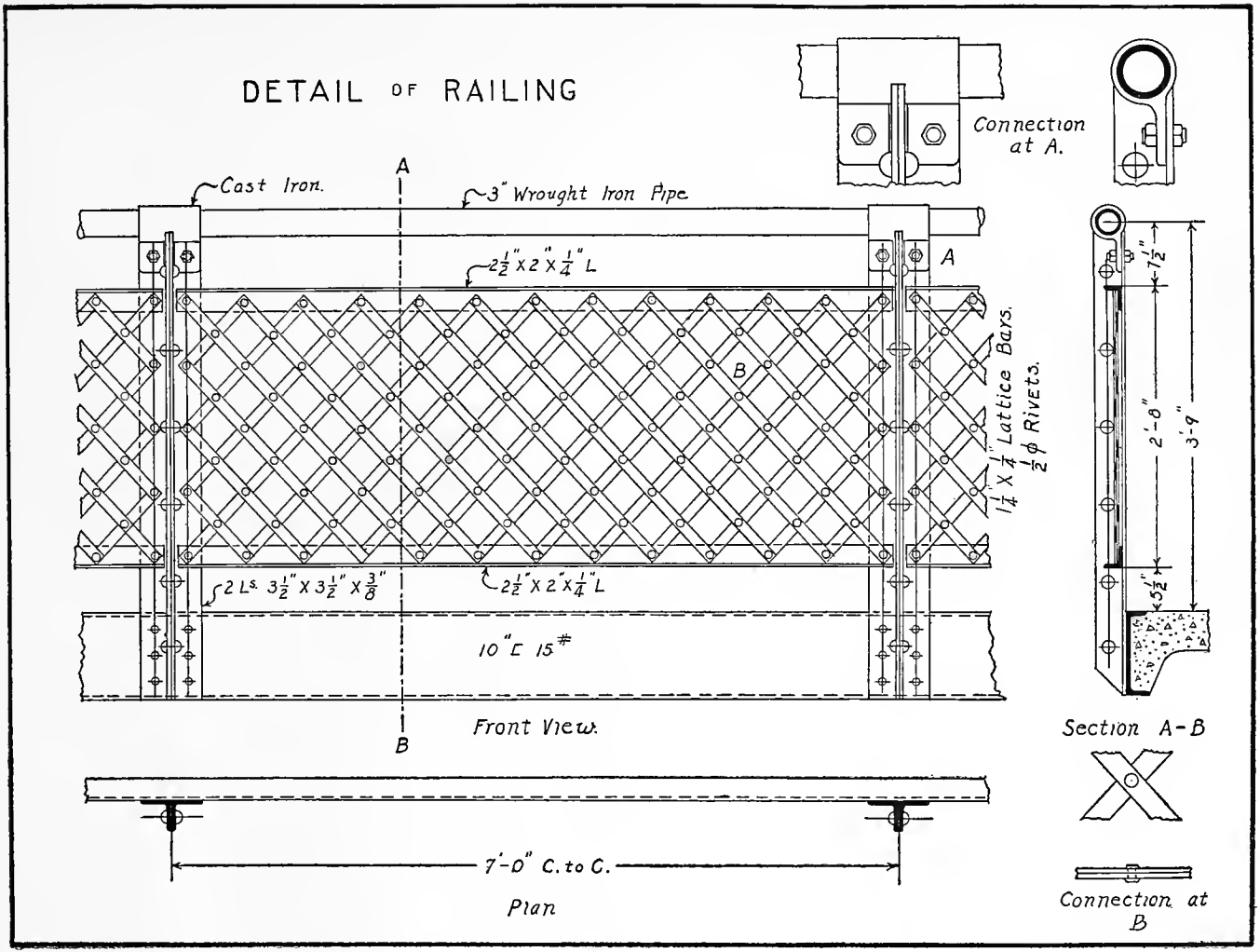

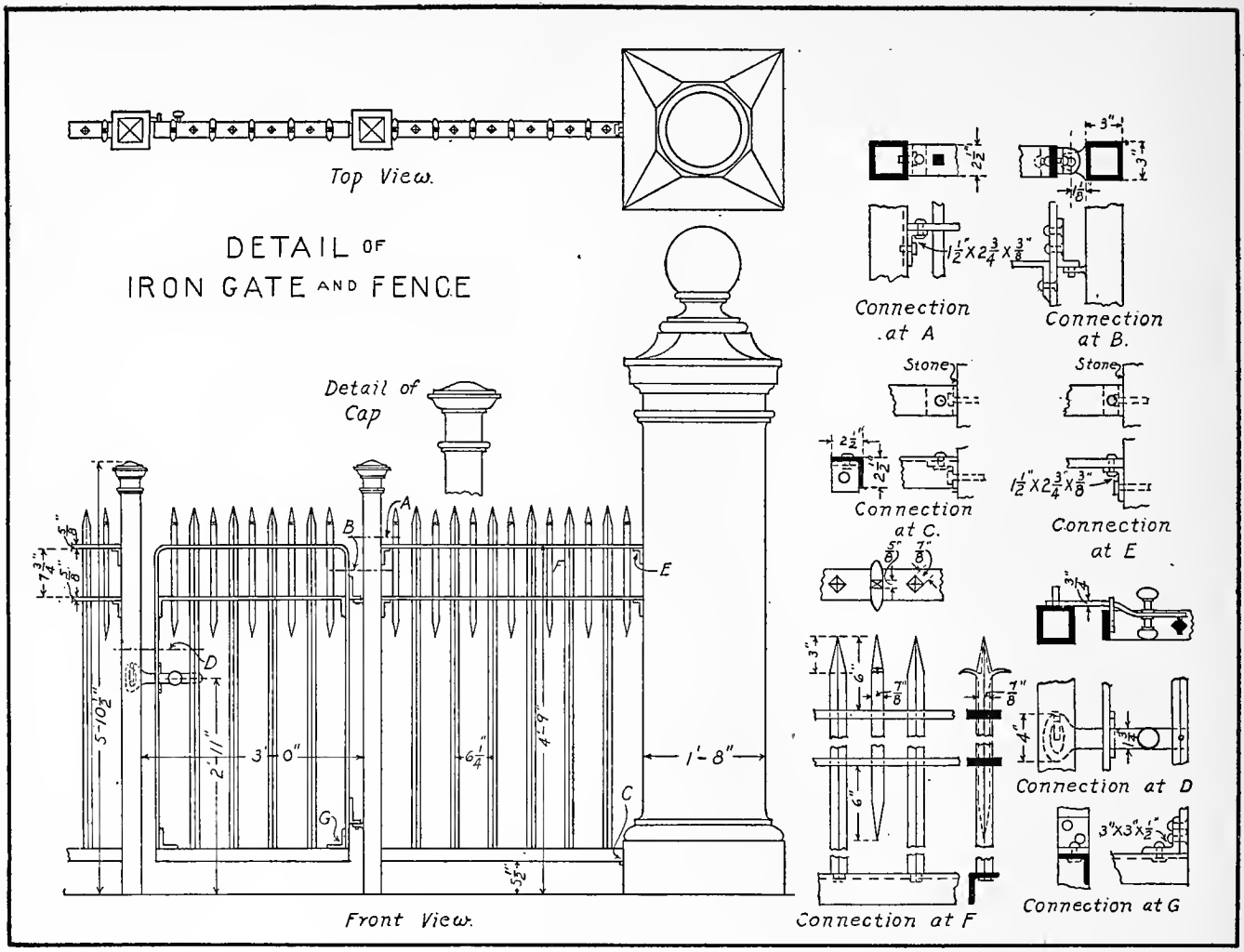
Top View.
DETAIL OF
IRON GATE AND FENCE
Detail of
Cap
Front View.
Connection
at A
Connection
at B.
Stone
Connection
at C.
Connection
at E
Connection at D
Connection at F
Connection at G

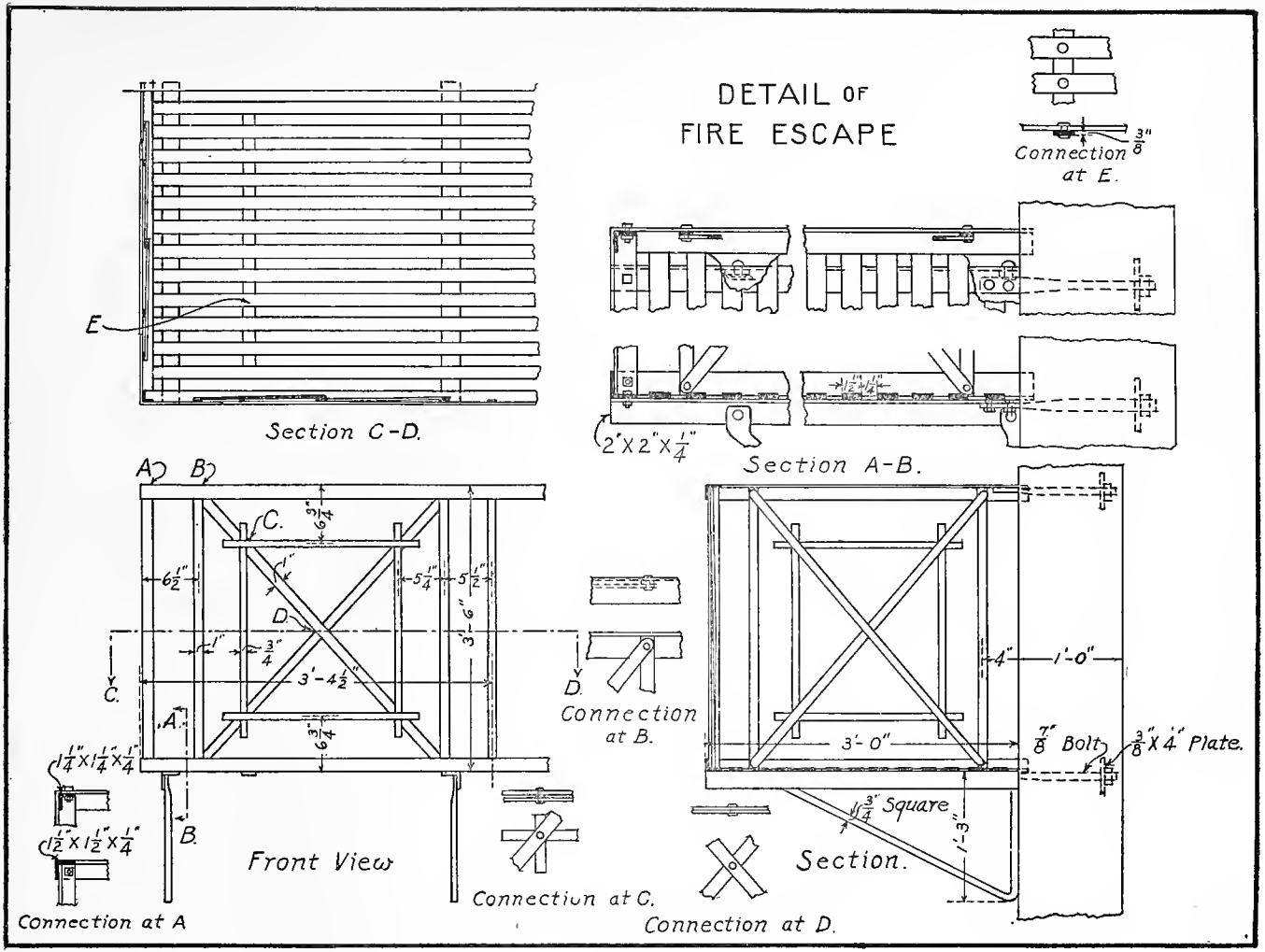
DETAIL OF
FIRE ESCAPE
Connection at E.
E
Section C-D.
2"X2"X1/4"
Section A-B.
A
B
C.
D.
6 3/4"
6 1/2"
5 1/4"
5 1/2"
3'-6"
3'-4 1/2"
1"
3/4"
Front View
Connection at A
Connection at B.
Connection at C.
4"
1'-0"
3'-0"
7/8" Bolt
3/8"X4" Plate.
1 3/4" Square
1'-3"
Section.
Connection at D.

Plate 78.

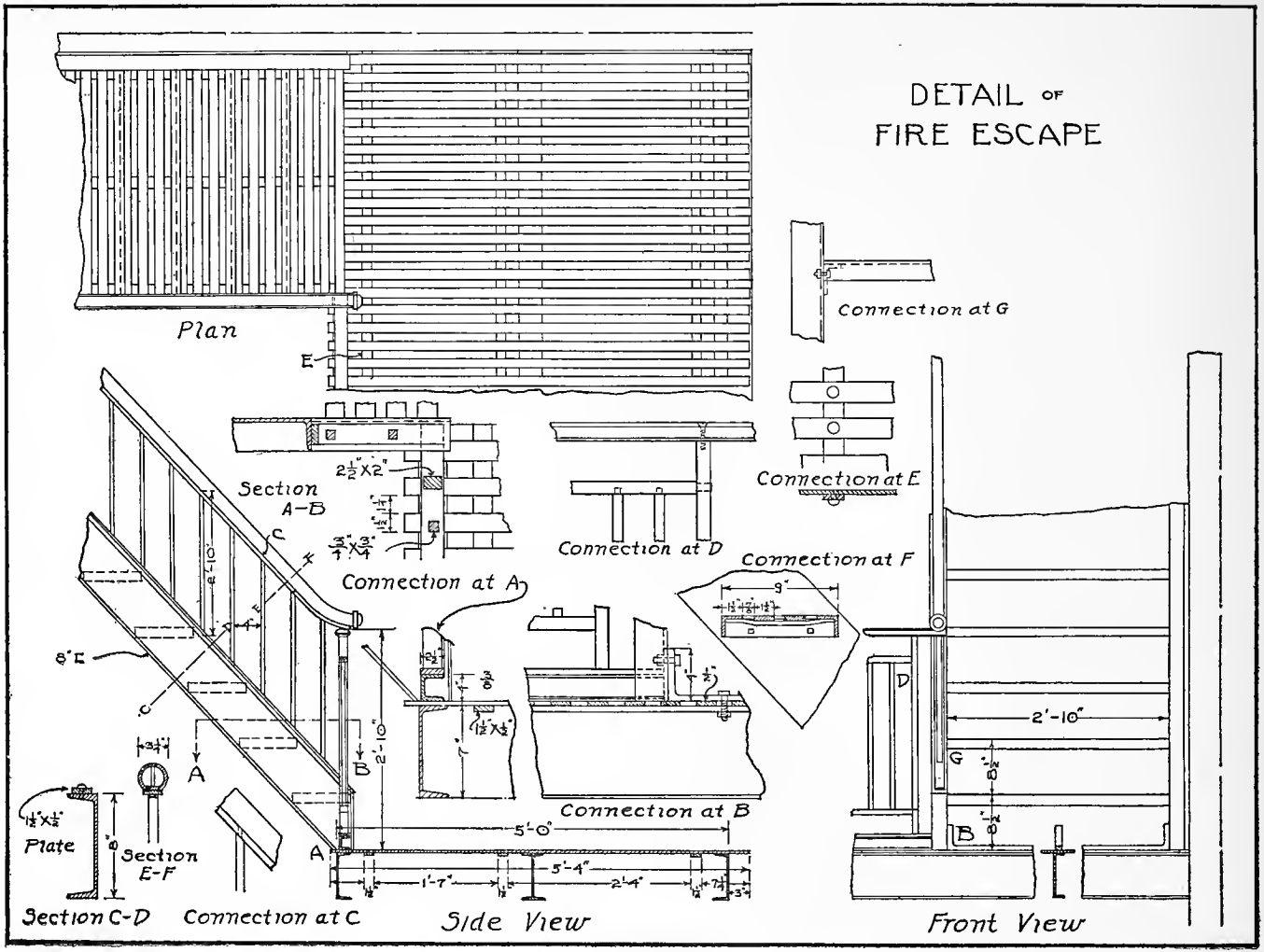
DETAIL OF
FIRE ESCAPE
Plan
E
Connection at G
Connection at E
Section
A-B
2½"X2"
¾"X¾"
Connection at D
Connection at F
Connection at A
9"
8"E
2'-10"
A
B
Connection at B
5'-0"
5'-4"
1'-7"
2'-4"
Plate
Section
E-F
Section C-D
Connection at C
Side View
Front View
D
G
2'-10"

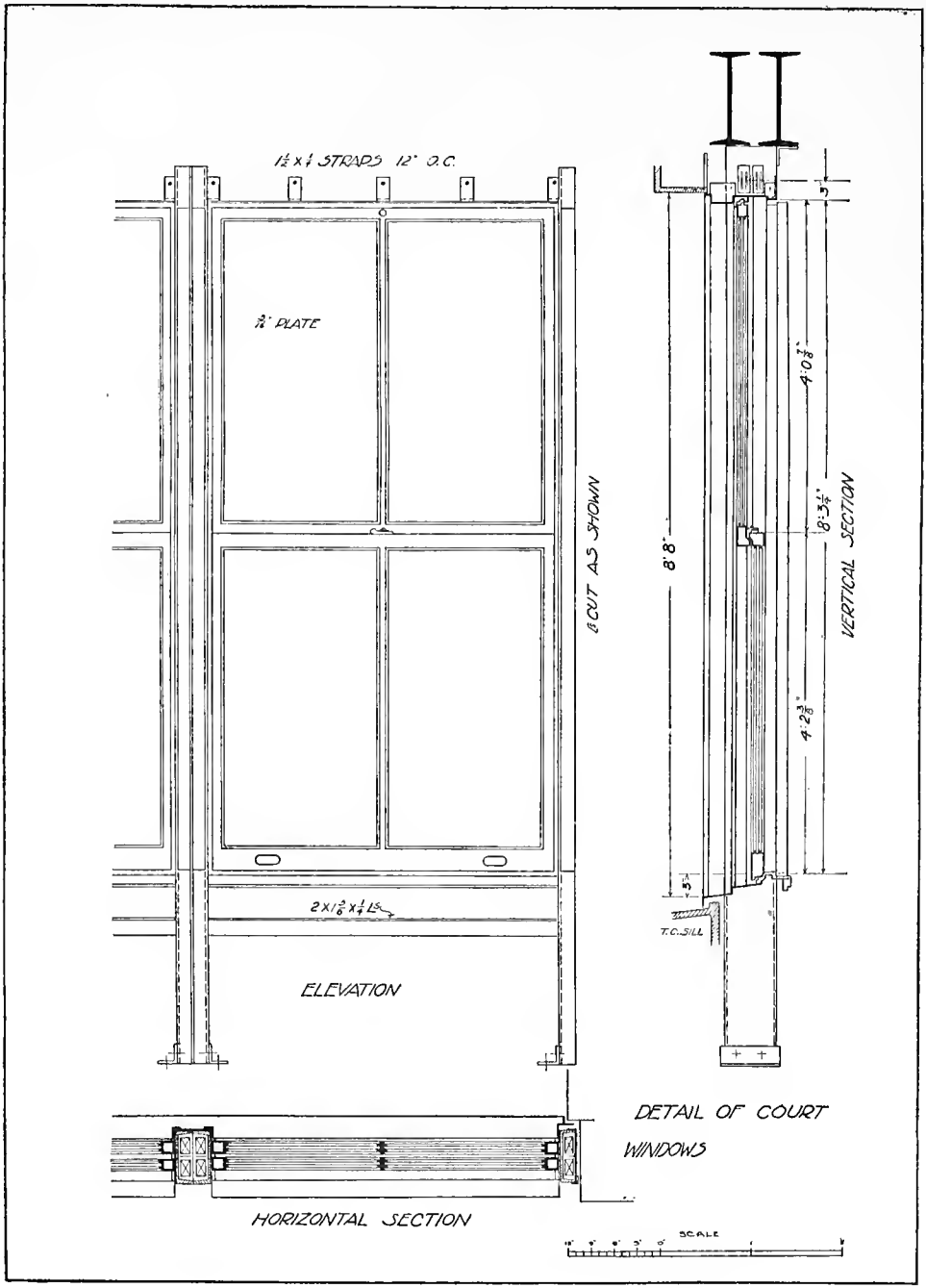
1½ x ¼ STRAPS 12" O.C.
3/16" PLATE
℄ CUT AS SHOWN
2 x 1⅝ x ¼ LS
ELEVATION
HORIZONTAL SECTION
8'8"
4'0⅞"
8'3¼"
4'2⅜"
VERTICAL SECTION
T.C. SILL
DETAIL OF COURT WINDOWS
SCALE

Plate 80.

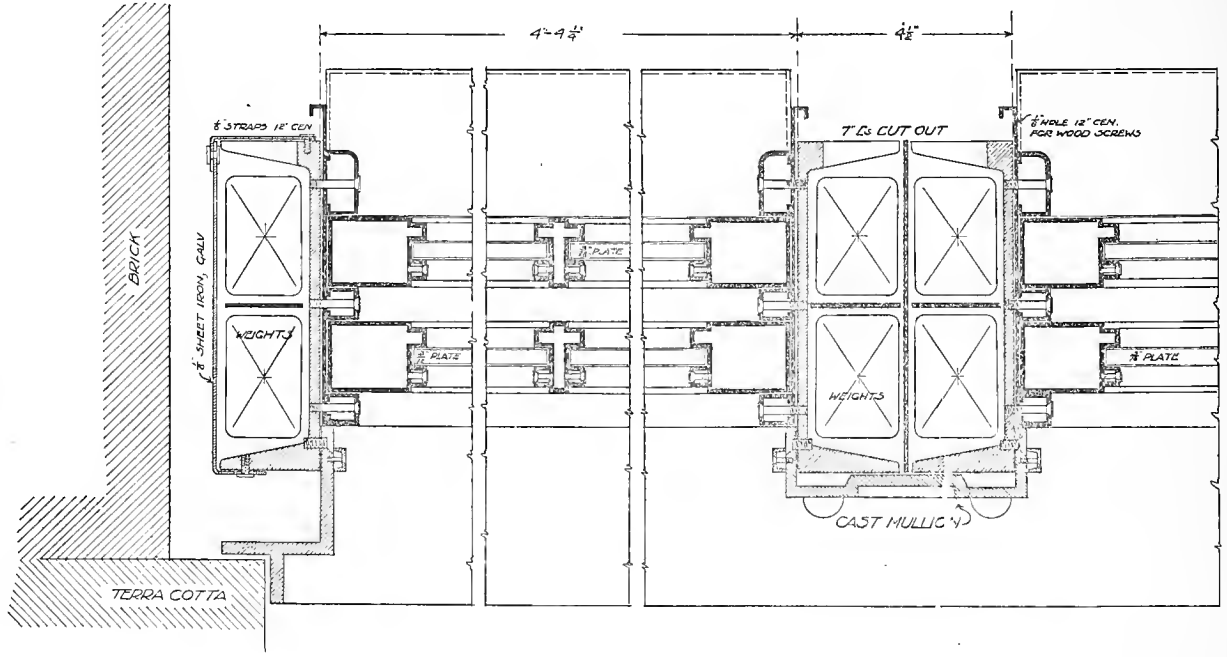

HORIZONTAL SECTION
THROUGH COURT WINDOWS

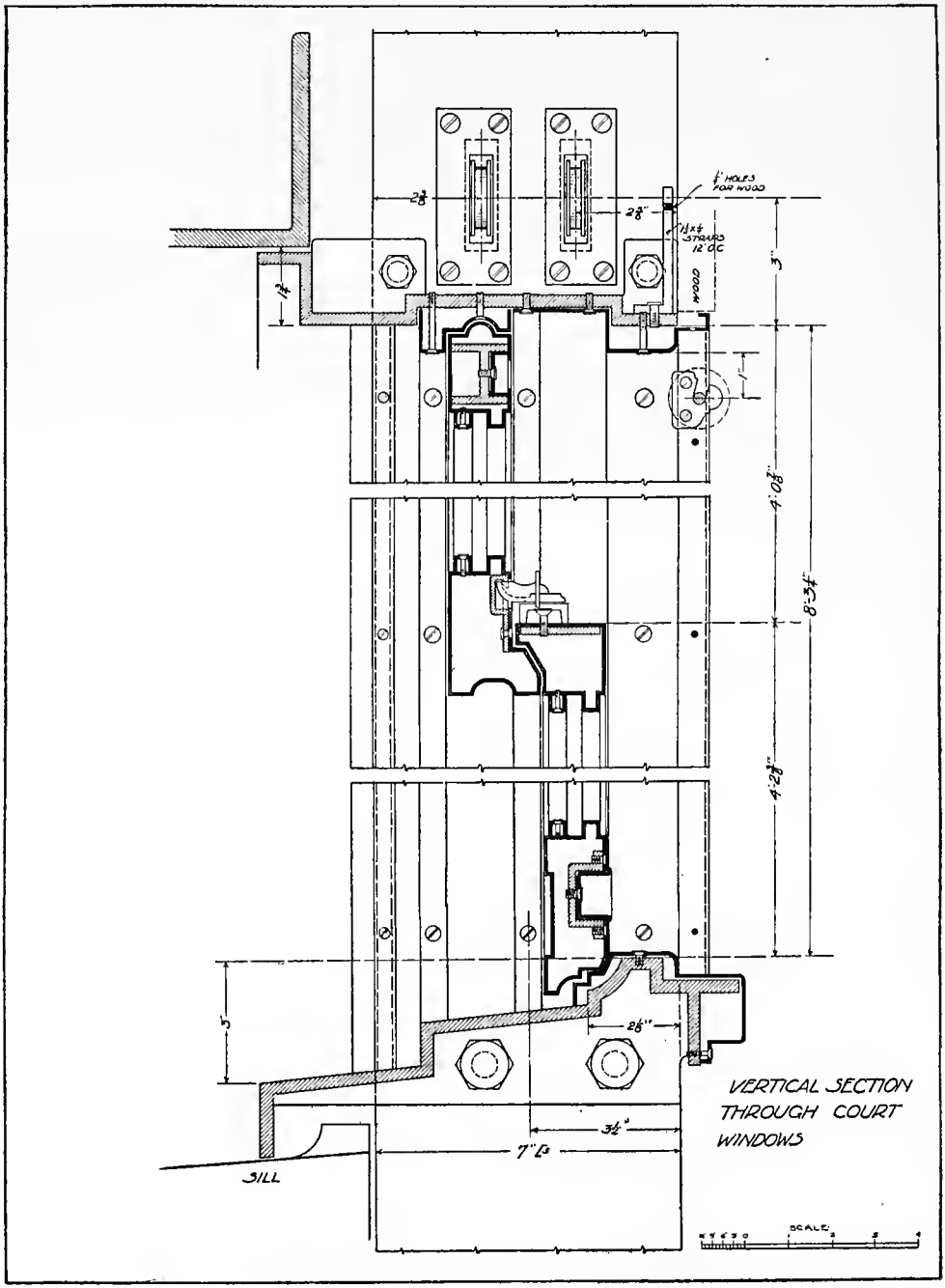

VERTICAL SECTION THROUGH COURT WINDOWS

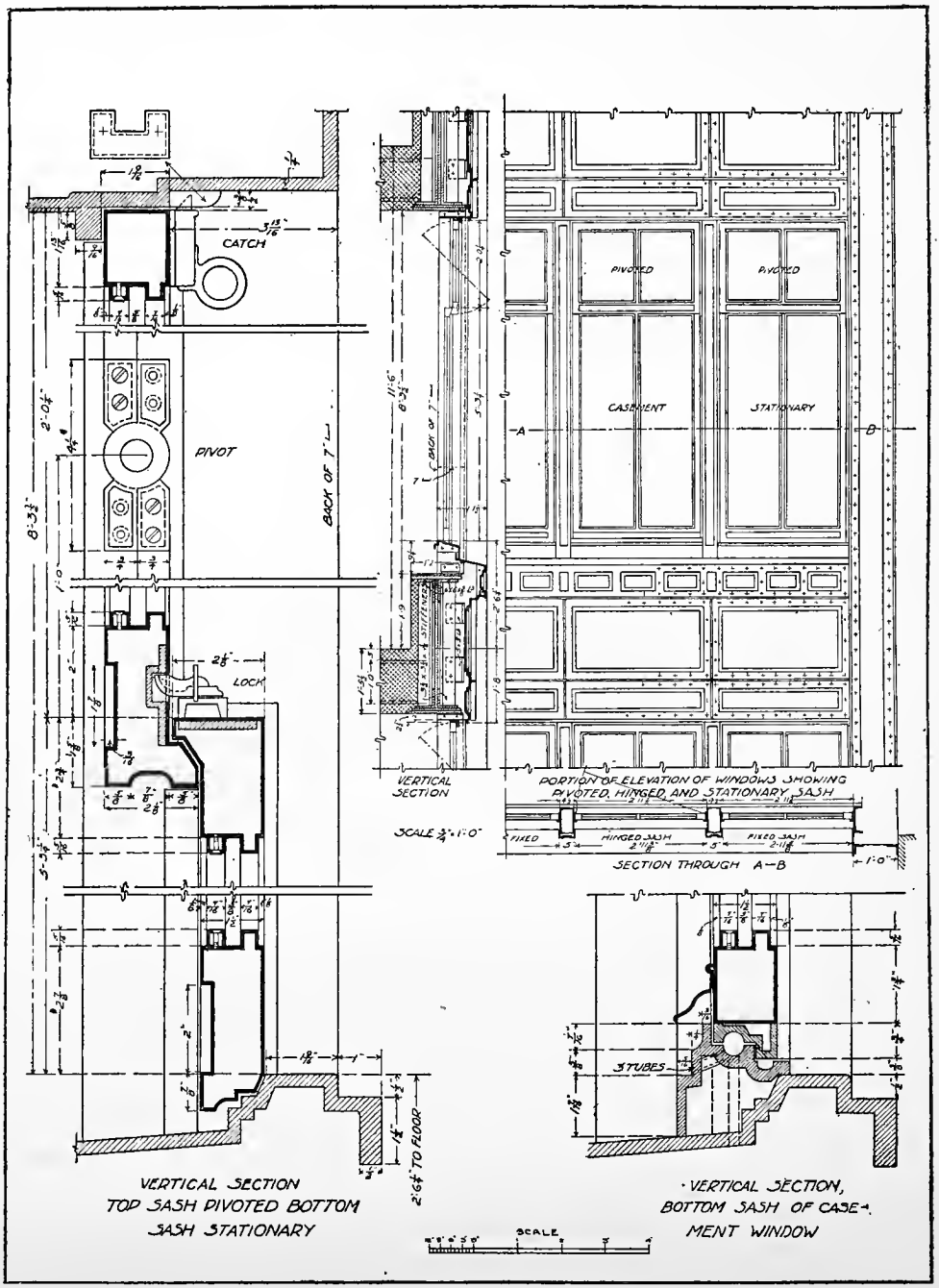
CATCH
PIVOT
BACK OF 7"
LOCK
PIVOTED
PIVOTED
CASEMENT
STATIONARY
A
B
VERTICAL SECTION
SCALE 3/4" = 1'-0"
PORTION OF ELEVATION OF WINDOWS SHOWING PIVOTED, HINGED AND STATIONARY SASH
FIXED
HINGED SASH
FIXED SASH
SECTION THROUGH A—B
STUBES
VERTICAL SECTION TOP SASH PIVOTED BOTTOM SASH STATIONARY
VERTICAL SECTION, BOTTOM SASH OF CASEMENT WINDOW
SCALE

OCT 20 1918

Deacidified using the Bookkeeper proces
Neutralizing agent: Magnesium Oxide
Treatment Date: Nov 2003

PreservationTechnologies
A WORLD LEADER IN PAPER PRESERVATIO
111 Thomson Park Drive
Cranberry Township, PA 16066
(724) 779-2111

LIBRARY OF
0 011 372 944 2